INTERNATIONAL STANDARD

ISO 11040-6

Second edition
2019-01

Prefilled syringes —

Part 6: Plastic barrels for injectables and sterilized subassembled syringes ready for filling

Seringues préremplies —

Partie 6: Cylindres en plastique pour produits injectables et seringues pré-assemblées stérilisées préremplissables

Reference number
ISO 11040-6:2019(E)

© ISO 2019

Copyright International Organization for Standardization
Provided by IHS Markit under license with ANSI
No reproduction or networking permitted without license from IHS

Licensee=Becton Dickinson - Loc 1 - 61, 64/5984713001, User=Chiu, Shelly
Not for Resale, 10/14/2019 19:11:42 MDT

COPYRIGHT PROTECTED DOCUMENT

© ISO 2019

All rights reserved. Unless otherwise specified, or required in the context of its implementation, no part of this publication may be reproduced or utilized otherwise in any form or by any means, electronic or mechanical, including photocopying, or posting on the internet or an intranet, without prior written permission. Permission can be requested from either ISO at the address below or ISO's member body in the country of the requester.

ISO copyright office
CP 401 • Ch. de Blandonnet 8
CH-1214 Vernier, Geneva
Phone: +41 22 749 01 11
Fax: +41 22 749 09 47
Email: copyright@iso.org
Website: www.iso.org

Published in Switzerland

Copyright International Organization for Standardization
Provided by IHS Markit under license with ANSI
No reproduction or networking permitted without license from IHS
Licensee=Becton Dickinson - Loc 1 - 61, 64/5984713001, User=Chiu, Shelly
Not for Resale, 10/14/2019 19:11:42 MDT

Contents

Page

Foreword ... **iv**
Introduction ... **v**
1 Scope ... **1**
2 Normative references ... **1**
3 Terms and definitions ... **2**
4 General requirements ... **3**
4.1 Quality systems ... 3
4.2 Testing ... 3
4.3 Documentation ... 3
5 Dimensions and designation ... **4**
5.1 Design including dimensions ... 4
5.2 Design requirements ... 7
5.2.1 Head design ... 7
5.2.2 Dead space ... 7
5.2.3 Functional testing of Luer cone/Luer lock connection ... 7
5.2.4 Flange breakage resistance ... 7
5.2.5 Syringe tip breakage resistance ... 7
6 Requirements ... **7**
6.1 General ... 7
6.2 Material ... 8
6.2.1 General ... 8
6.2.2 Duty of notification concerning modifications to polymers ... 8
6.2.3 Needle ... 8
6.2.4 Closure system ... 9
6.2.5 Closure system integrity ... 10
6.3 Physical requirements ... 10
6.3.1 Sterilization ... 10
6.3.2 Clarity and transparency ... 10
6.3.3 Particulate contamination ... 10
6.3.4 Lubricants ... 11
6.4 Chemical requirements ... 11
6.5 Endotoxins and biological requirements ... 11
7 Graduation ... **12**
8 Packaging and labelling ... **12**
Annex A (informative) **Examples of types of sterilized subassembled syringes ready for filling** ... **13**
Annex B (informative) **Head designs** ... **16**
Annex C (normative) **Test methods for syringe barrels** ... **18**
Annex D (informative) **Sample preparation for endotoxin and particulate determination** ... **24**
Annex E (informative) **Evaluation of syringe lubrication by glide force test method** ... **28**
Annex F (informative) **Needle penetration test** ... **31**
Annex G (normative) **Test methods for syringe closure systems** ... **34**
Annex H (informative) **Dye solution tightness test** ... **49**
Annex I (informative) **Guidance on materials** ... **51**
Bibliography ... **52**

© ISO 2019 – All rights reserved

Copyright International Organization for Standardization
Provided by IHS Markit under license with ANSI
No reproduction or networking permitted without license from IHS
Licensee=Becton Dickinson - Loc 1 - 61, 64/5984713001, User=Chiu, Shelly
Not for Resale, 10/14/2019 19:11:42 MDT

Foreword

ISO (the International Organization for Standardization) is a worldwide federation of national standards bodies (ISO member bodies). The work of preparing International Standards is normally carried out through ISO technical committees. Each member body interested in a subject for which a technical committee has been established has the right to be represented on that committee. International organizations, governmental and non-governmental, in liaison with ISO, also take part in the work. ISO collaborates closely with the International Electrotechnical Commission (IEC) on all matters of electrotechnical standardization.

The procedures used to develop this document and those intended for its further maintenance are described in the ISO/IEC Directives, Part 1. In particular, the different approval criteria needed for the different types of ISO documents should be noted. This document was drafted in accordance with the editorial rules of the ISO/IEC Directives, Part 2 (see www.iso.org/directives).

Attention is drawn to the possibility that some of the elements of this document may be the subject of patent rights. ISO shall not be held responsible for identifying any or all such patent rights. Details of any patent rights identified during the development of the document will be in the Introduction and/or on the ISO list of patent declarations received (see www.iso.org/patents).

Any trade name used in this document is information given for the convenience of users and does not constitute an endorsement.

For an explanation of the voluntary nature of standards, the meaning of ISO specific terms and expressions related to conformity assessment, as well as information about ISO's adherence to the World Trade Organization (WTO) principles in the Technical Barriers to Trade (TBT) see www.iso.org/iso/foreword.html.

This document was prepared by Technical Committee ISO/TC 76 *Transfusion, infusion and injection, and blood processing equipment for medical and pharmaceutical use*.

This second edition cancels and replaces the first edition (ISO 11040-6:2012), which has been technically revised. The main changes compared to the previous edition are as follows:

— Scope has been extended by adding sterilized subassembled syringes ready for filling. Appropriate requirements and test methods have been included;

— general requirements have been added on quality systems, testing, and documentation;

— requirements on labelling have been revised;

— requirements on packaging have been added;

— requirements on syringes barrels have been revised by:

  — adding requirements and related test methods for flange breakage and tip breakage (cone or staked in needle head) resistance, and

  — adding requirements on lubrication.

A list of all parts in the ISO 11040 series can be found on the ISO website.

Any feedback or questions on this document should be directed to the user's national standards body. A complete listing of these bodies can be found at www.iso.org/members.html.

© ISO 2019 – All rights reserved

Copyright International Organization for Standardization
Provided by IHS Markit under license with ANSI
No reproduction or networking permitted without license from IHS

Licensee=Becton Dickinson - Loc 1 - 61, 64/5984713001, User=Chiu, Shelly
Not for Resale, 10/14/2019 19:11:42 MDT

Introduction

Ampoules and injection bottles have been mainly used as primary packaging material for the administration of injectables. However, for the injection of the liquid medicinal products stored in these containers, a hypodermic syringe combined with the appropriate injection cannula is also needed. This requires that the medicinal product be transferred into the hypodermic syringe before its final use. This procedure is not only time-consuming; it can also easily result in mix-ups and possible contamination.

In conjunction with the appropriate sealing components, prefilled single-use syringes conforming to this document form a safe system for the transport, storage and administration of medicine. Due to relatively simple handling procedures, they permit fast injection of the medicinal products contained within them.

Such prefilled syringes permit immediate injection of the product contained after relatively simple handling. These syringes can also be used in injectors with automated functions where further and particular requirements apply.

In more recent years, new technological developments have been made to provide prefilled syringes on the basis of polymers as a material for the barrel of a prefilled syringe system; these developments have been spurred by progress in polymer science and introduction of novel polymers.

This document can also be used by engineers as a basis for the development and marketing of standardized filling and processing equipment, e.g. so-called tub and nest filling presentations. Manufacturers of filling equipment and ancillary processing equipment can use this document to achieve a certain degree of unification with regard to the design of these standardized items of equipment.

Based on the dimensions of the prefilled syringes, appropriate components, such as rubber plungers, tip caps, needle shields, and other closure systems can also be standardized. In conjunction with the right sealing components, they offer a system for (parenteral) injectable use. It is advised to contact the component and system provider for verifying the component compatibility, e.g. for silicone-oil free or lubricant free systems or if specific matching of components is required. The producers of filling machines can apply this document to achieve a degree of standardization in the equipment of the machines.

For sterilized sub-assembled syringes ready for filling, the responsibility for the process steps relevant to the injectable product lies with the manufacturer[1)]. Following the assembly of the needle shield on syringes with a staked needle or tip caps for the Luer cone version, the subassembled syringes are placed into nests. The nests, in turn, are placed into a plastic tub. The syringes in the nest are protected by means of an insert liner and the tub itself is sealed by a sealing lid (which is currently and, so far, primarily achieved using a porous material). Thus, the tub properly sealed with the sealing lid represents the “sterile barrier system”. The sealed tub is then wrapped into a sealable bag and, thus, ready for sterilization. Various sterilization methods can be applied with polymer syringes e.g. Gamma, E-beam, X-Ray irradiation, Moist Heat (autoclave), ethylene oxide.

The sterilized subassembled syringes ready for filling are delivered to the pharmaceutical companies in a sterile condition, where they are processed on suitable machines.

Compatibility tests with the intended drug product are carried out under the responsibility of the market authorization holder before the final approval is granted. This is described in 11040-8.

NOTE Primary packaging materials are an integral part of medicinal products. Thus, the principles of the current Good Manufacturing Practices (cGMP) apply to the manufacturing of these components (e.g. ISO 15378).

1) Washing after injection moulding for endotoxin reduction can be eliminated provided that the moulding, assembling and packaging steps into the sealed sterile barrier system (tub and nest) takes place in a monitored cleanroom (ISO 14644) and accompanied by microbial cleanroom monitoring.

© ISO 2019 – All rights reserved

Copyright International Organization for Standardization
Provided by IHS Markit under license with ANSI
No reproduction or networking permitted without license from IHS
Licensee=Becton Dickinson - Loc 1 - 61, 64/5984713001, User=Chiu, Shelly
Not for Resale, 10/14/2019 19:11:42 MDT

Copyright International Organization for Standardization
Provided by IHS Markit under license with ANSI
No reproduction or networking permitted without license from IHS

Licensee=Becton Dickinson - Loc 1 - 61, 64/5984713001, User=Chiu, Shelly
Not for Resale, 10/14/2019 19:11:42 MDT

Prefilled syringes —

Part 6: Plastic barrels for injectables and sterilized subassembled syringes ready for filling

1 Scope

This document specifies materials, dimensions, quality, and performance requirements, as well as test methods for polymer barrels and sterilized subassembled syringes ready for filling, intended for single use only.

This document also specifies those components that are part of the sterilized subassembled syringe ready for filling.

Polymer barrels and sterilized subassembled syringes ready for filling in accordance with this document are intended for single use only.

Components to complete the subassembled syringe, such as plunger and rod, are not specified in this document.

Prefilled syringes can be produced on dedicated and specifically designed processing equipment such as inline moulding and filling. This document does not apply but can be used also for such dedicated prefilled syringes.

2 Normative references

The following documents are referred to in the text in such a way that some or all of their content constitutes requirements of this document. For dated references, only the edition cited applies. For undated references, the latest edition of the referenced document (including any amendments) applies.

ISO 7864:2016, *Sterile hypodermic needles for single use — Requirements and test methods*

ISO 7886-1, *Sterile hypodermic syringes for single use — Part 1: Syringes for manual use*

ISO 8871-1, *Elastomeric parts for parenterals and for devices for pharmaceutical use — Part 1: Extractables in aqueous autoclavates*

ISO 9626, *Stainless steel needle tubing for the manufacture of medical devices — Requirements and test methods*

ISO 10993-1, *Biological evaluation of medical devices — Part 1: Evaluation and testing within a risk management process*

ISO 14971, *Medical devices — Application of risk management to medical devices*

ISO 80369-1, *Small-bore connectors for liquids and gases in healthcare applications — Part 1: General requirements*

ISO 80369-7, *Small-bore connectors for liquids and gases in healthcare applications — Part 7: Connectors for intravascular or hypodermic applications*

© ISO 2019 – All rights reserved

Copyright International Organization for Standardization
Provided by IHS Markit under license with ANSI
No reproduction or networking permitted without license from IHS
Licensee=Becton Dickinson - Loc 1 - 61, 64/5984713001, User=Chiu, Shelly
Not for Resale, 10/14/2019 19:11:42 MDT

3 Terms and definitions

For the purposes of this document, the following terms and definitions apply.

ISO and IEC maintain terminological databases for use in standardization at the following addresses:

— ISO Online browsing platform: available at https://www.iso.org/obp

— IEC Electropedia: available at http://www.electropedia.org/

3.1
customer
business entity which purchases *syringe barrels* (3.6) or *sterilized subassembled syringes ready for filling* (3.7) and conducts further processing or filling as appropriate

3.2
manufacturer
business entity which performs or is otherwise responsible for the manufacturing of the *syringe barrels* (3.6) (plastic barrels for injectables) or for the *sterilized subassembled syringes ready for filling* (3.7) by the *customer* (3.1)

3.3
needle shield
syringe closure used with staked needle subassembled syringes that is designed to protect the needle point/bevel from damage, to allow sterilization of the needle, and to maintain sterility of the contents of the syringe and of the needle up to the time of injection

3.4
prefilled syringe
container system filled with the injectable product ready for injection

Note 1 to entry: Components of prefilled syringes are barrel, needle, closure system, plunger, and rod. Examples of sterilized subassembled syringes ready for filling including components are given in Annex A.

3.5
staked needle syringe
syringe with a needle integrated into the barrel

Note 1 to entry: The fixation can be done by insert moulding, gluing or other bonding methods.

3.6
syringe barrel
cylindrical polymer body with front end and finger flange

Note 1 to entry: See Figure 1.

Note 2 to entry: The syringe barrel can be equipped with a staked needle.

3.7
sterilized subassembled syringe ready for filling
subassembly that has been pre-treated, consisting of a *syringe barrel* (3.6) and a closure system

Note 1 to entry: The subassembly has been pre-treated by applying the following processes, as applicable:

— injection moulding;

— assembling/lubricating needle;

— applying a lubricant to syringe barrel inner surface;

— sealing the syringe with a closure system;

— packaging (see ISO 11040-7);

© ISO 2019 – All rights reserved
Copyright International Organization for Standardization
Provided by IHS Markit under license with ANSI
No reproduction or networking permitted without license from IHS
Licensee=Becton Dickinson - Loc 1 - 61, 64/5984713001, User=Chiu, Shelly
Not for Resale, 10/14/2019 19:11:42 MDT

— sterilization.

Note 2 to entry: Examples of sterilized subassembled syringes ready for filling including components are given in Annex A.

3.8
syringe closure system
component or multi-component system designed to close the syringe system at the front end that is designed to allow sterilization of the syringe tip and maintain sterility of the contents of the syringe up to the time of injection

EXAMPLE Tip cap, *needle shield* (3.3), tamper-evident closure system.

4 General requirements

4.1 Quality systems

The activities described within this document shall be carried out within a formal quality system.

NOTE 1 ISO 15378 contains requirements for a suitable quality management system for primary packaging materials for medicinal products.

NOTE 2 ISO 14971 can be used as a tool for conducting risk assessment.

NOTE 3 ISO 13485 can be used as a tool for design control during development phase and contains requirements for a suitable quality management system.

4.2 Testing

4.2.1 Any suitable test system can be used when the required accuracy (calibration) and precision (gauge repeatability and reproducibility) can be obtained. The gauge repeatability and reproducibility of the test apparatus shall be no greater than 20 % of the allowed tolerance range for any given measurement. For destructive test measurements, the gauge repeatability and reproducibility shall be no greater than 30 % of the allowed tolerance range. At a minimum, the gauge repeatability and reproducibility should cover ±2 standard deviations (thereby covering approximately 95 % of the variation).

EXAMPLE A measurement system with a measurement specification limit of ±0,01 ml (range of 0,02 ml) comes out of the gauge repeatability and reproducibility with a gauge repeatability and reproducibility/tolerance range ratio of 20 %, which means that the gauge repeatability and reproducibility (four standard uncertainties) equals 0,02 ml/5 = 0,004 ml. The uncertainty of the measurement is ±2 standard deviations (see ISO/IEC Guide 98-3), which equals to 0,002 ml.

4.2.2 The sampling plans used for the selection and testing of sterilized subassembled syringes ready for filling or components thereof shall be based upon statistically valid rationale.

NOTE Examples of suitable sampling plans are given in ISO 2859-1 and ISO 3951 (all parts).

4.2.3 Unless agreed otherwise, testing shall be performed at ambient laboratory conditions.

4.3 Documentation

4.3.1 Demonstration of conformity with the requirements of this document shall be documented.

4.3.2 All documentation shall be retained for a specified period of time. The retention period shall consider factors such as regulatory requirements, expiration date, and traceability.

4.3.3 Documentation of conformity with the requirements can include, but is not limited to, performance data, specifications, and test results from validated test methods.

© ISO 2019 – All rights reserved

Copyright International Organization for Standardization
Provided by IHS Markit under license with ANSI
No reproduction or networking permitted without license from IHS
Licensee=Becton Dickinson - Loc 1 - 61, 64/5984713001, User=Chiu, Shelly
Not for Resale, 10/14/2019 19:11:42 MDT

4.3.4 Electronic records, electronic signatures, and handwritten signatures executed to electronic records that contribute to validation, process control, or other quality decision-making processes shall be reliable.

5 Dimensions and designation

5.1 Design including dimensions

5.1.1 The dimensions of the syringe barrel shall be as shown in Figure 1 and as given in Table 1.

The type of head design shall be agreed upon between the manufacturer and the customer. For the Luer tip and the Luer lock design, ISO 80369-1 shall apply, and ISO 80369-7 apply.

5.1.2 If printing of the barrel is required, it shall be agreed between the manufacturer and the customer.

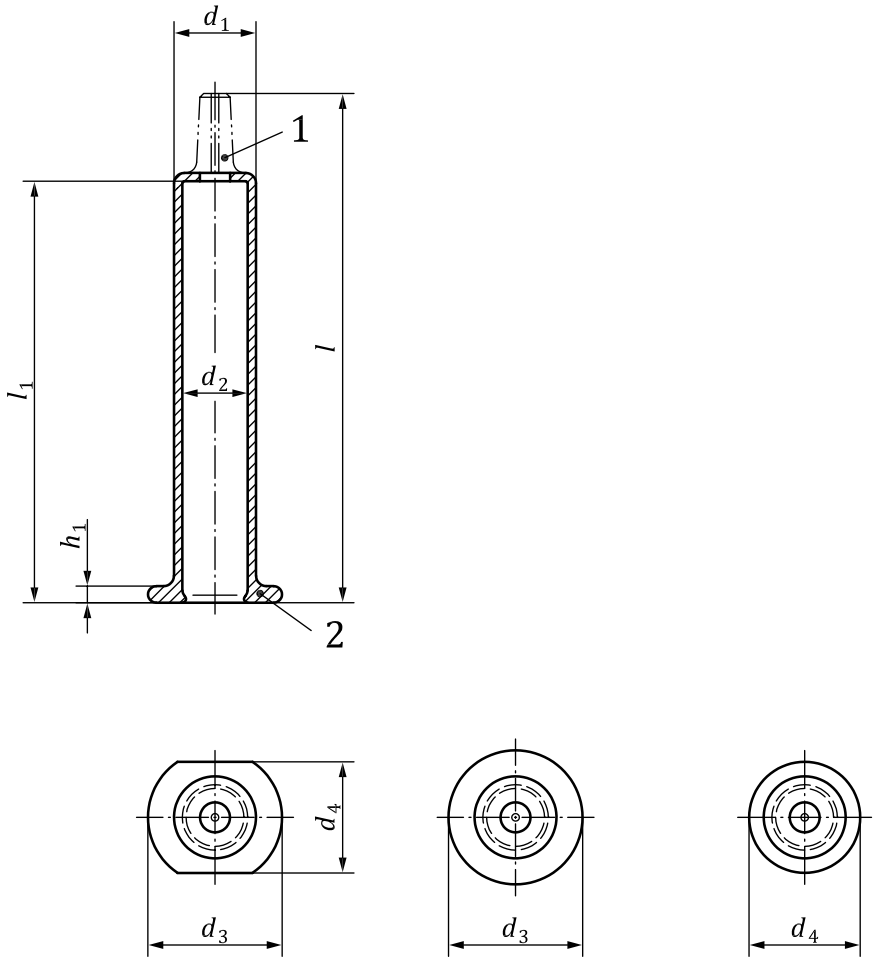

Key

1 front end

2 back end

NOTE 1 Edges can be slightly rounded.

NOTE 2 The design of the finger flange is agreed between the manufacturer and the customer.

Figure 1 — Typical example of a barrel and polymer finger flange for a prefilled syringe

© ISO 2019 – All rights reserved
Copyright International Organization for Standardization
Provided by IHS Markit under license with ANSI
No reproduction or networking permitted without license from IHS
Licensee=Becton Dickinson - Loc 1 - 61, 64/5984713001, User=Chiu, Shelly
Not for Resale, 10/14/2019 19:11:42 MDT

The dimensions of the barrel shall be in accordance with Figure 1 and Table 1. These are the minimum required dimensions. Depending on the application, any other dimensions should be agreed between the manufacturer and the customer. Head designs of polymer barrels are shown in Annex B.

When there are particular dimensional requirements, which are common when a syringe is used in combination with injectors, it is recommended that these requirements be agreed between the supplier and the customer.

© ISO 2019 – All rights reserved

Copyright International Organization for Standardization
Provided by IHS Markit under license with ANSI
No reproduction or networking permitted without license from IHS
Licensee=Becton Dickinson - Loc 1 - 61, 64/5984713001, User=Chiu, Shelly
Not for Resale, 10/14/2019 19:11:42 MDT

Table 1 — Barrel dimensions

Dimensions in millimetres

Nominal volume	Nominal dimension tolerances						
ml	d_1	d_2[a]	l	l_1	h_1	d_3	d_4
0,5	6,8 to 8,2 ± 0,1 6,8 to 9,7 ± 0,1[b]	4,6 to 4,8 ± 0,1	57,0 to 64,8 ± 0,2	47,5 to 54,1 ± 0,2	1,8 to 2,1 ± 0,1	13,4 to 13,8 ± 0,1	10,5 to 11,0 ± 0,1
1[c]	8,1 to 9,7 ± 0,1	6,3 to 6,5 ± 0,1	64,0 to 64,5 ± 0,2	54,0 to 54,5 ± 0,2	1,9 to 2,3 ± 0,1	13,7 to 13,8 ± 0,1	10,5 to 11,0 ± 0,1
1[d]	10,8 to 11,4 ± 0,1	8,5 to 8,75 ± 0,1	45,9 to 46,9 ± 0,2	35,2 to 35,9 ± 0,2	1,9 to 2,3 ± 0,1	17,75 ± 0,1	14,70 ± 0,1
2,25	10,8 to 11,4 ± 0,1	8,5 to 8,75 ± 0,1	64,4 to 66,8 ± 0,2	53,9 to 54,6 ± 0,2	1,9 to 2,3 ± 0,1	17,75 ± 0,1	14,70 ± 0,1
3	10,8 to 11,6 ± 0,1	8,5 to 8,75 ± 0,1	82,4 to 84,6 ± 0,2	71,7 to 72,4 ± 0,2	1,9 to 2,3 ± 0,1	17,75 ± 0,1	14,70 ± 0,1
5	14,4 to 15,0 ± 0,1	11,7 to 12,2 ± 0,1	76,5 to 80,0 ± 0,2	64,3 to 66,7 ± 0,2	2,0 to 3,1 ± 0,15	22,9 to 23,1 ± 0,1	19,40 to 19,9 ± 0,1
10	16,6 to 18,0 ± 0,1	14,1 to 14,7 ± 0,1	97,7 to 100,5 ± 0,3	86,2 to 87,3 ± 0,2	2,0 to 3,1 ± 0,15	26,9 to 27,4 ± 0,1	21,50 to 21,9 ± 0,1
20	21,2 to 22,7 ± 0,15	18,2 to 19,1 ± 0,15	107,3 to 120,2± 0,3	95,6 to 109,1 ± 0,2	2,0 to 3,1 ± 0,15	32,25 to 39,0 ± 0,15	25,15 to 26,1± 0,15
50	29,2 to 32,3 ± 0,2	26,4 to 29,3 ± 0,2	128,8 to 151,2[e] ± 0,5	118,7 to 128,2[e] ± 0,5	2,0 to 3,5 ± 0,2	45,00 to 50,1 ± 0,2	33,2 to 39,10 ± 0,2
100	35,2 to 35,5 ± 0,2	31,8 to 32,2 ± 0,2	169,8 ± 0,5	156,4 ± 0,5	2,7 to 3,1 ± 0,2	47,65 ± 0,2	41,45 ± 0,2

[a] For the specification of the inner diameter, the specification of the plunger shall be considered with regard to break loose force and sustaining force as well as for plunger/barrel seal tightness. The size of the inner diameter also depends on the polymer material.

[b] This range is dedicated to barrels with an integrated Luer lock.

[c] Long.

[d] Short or standard.

[e] This range is required in order to consider particular applications, such as pumps and injectors.

© ISO 2019 – All rights reserved

Copyright International Organization for Standardization
Provided by IHS Markit under license with ANSI
No reproduction or networking permitted without license from IHS
Licensee=Becton Dickinson - Loc 1 - 61, 64/5984713001, User=Chiu, Shelly
Not for Resale, 10/14/2019 19:11:42 MDT

5.2 Design requirements

5.2.1 Head design

The type of head design shall be agreed upon between the provider of the barrel component and the customer responsible for filling and finishing the polymer prefilled syringe. For the Luer tip and the Luer lock design, ISO 80369-7 shall apply. Annex B includes certain examples of head designs.

5.2.2 Dead space

When tested in combination with the selected plunger stopper, the dead space in the barrel and the tip with the plunger stopper fully inserted shall be determined as given in ISO 7886-1. Specification should be agreed upon between the manufacturer and customer.

5.2.3 Functional testing of Luer cone/Luer lock connection

The functional performance of the polymer prefilled syringe barrel with regard to the Luer tip or Luer lock connection shall be demonstrated through performance testing in accordance with ISO 80369-7.

5.2.4 Flange breakage resistance

Syringe barrels shall provide an appropriate flange breakage resistance. Limit values are subject to agreement between the manufacturer and the customer.

The flange breakage resistance shall be determined in accordance with C.1.

NOTE The flange breakage resistance test method is a reference test to provide a consistent measure for comparison of the performance of different syringes and can potentially be used as a quality measure to assess changes and monitor production. The test method can be adjusted to simulate specific use conditions of the syringe system, e.g. use in auto-injectors.

5.2.5 Syringe tip breakage resistance

Syringe barrels shall provide an appropriate syringe tip breakage resistance. Limit values are subject to agreement between the manufacturer and the customer.

The syringe tip breakage resistance shall be determined in accordance with C.2.

Diameter of syringe holder according to Figure C.4 shall be adjusted to the syringe outer diameter given in Table C.1.

NOTE The syringe tip breakage resistance test method is a reference test to provide a consistent measure for comparison of the performance of different syringes and can potentially be used as a quality measure to assess changes and monitor production. The test method can be adjusted to simulate specific use conditions of the syringe system, e.g. use in auto-injectors.

6 Requirements

6.1 General

The attention of the provider of the barrel component and the customer responsible for filling and finishing the plastic prefilled syringe is drawn to applicable performance requirements in monographs of, for example, the European Pharmacopoeia (Ph. Eur.), the United States Pharmacopoeia (USP) or the Japanese Pharmacopoeia (JP).

© ISO 2019 – All rights reserved

Copyright International Organization for Standardization
Provided by IHS Markit under license with ANSI
No reproduction or networking permitted without license from IHS
Licensee=Becton Dickinson - Loc 1 - 61, 64/5984713001, User=Chiu, Shelly
Not for Resale, 10/14/2019 19:11:42 MDT

The manufacturer shall have documented procedures for the design and development of sterilized subassembled syringes ready for filling.

NOTE ISO 15378 and ISO 13485 contain requirements for a suitable quality management system for primary packaging materials for medicinal products.

6.2 Material

6.2.1 General

The following properties should be considered when selecting the raw materials or components and the design of the sterilized subassembled syringe ready for filling:

a) microbial barrier;

b) biocompatibility and toxicological attributes;

c) physical and chemical properties;

d) ability for sterilization and compatibility with respect to the intended sterilization process;

e) maintenance of sterility of the subassembly;

f) shelf-life limitations;

g) functionality regarding fill-finish;

h) robustness of the closure system during transport from the manufacturer to the customer.

The material shall exhibit the appropriate performance properties, e.g. oxygen and water vapour permeability.

NOTE For guidance on materials, as well as polymer material codification, see Annex I.

6.2.2 Duty of notification concerning modifications to polymers

Change control and notification procedures, need to be in place between the company transforming the polymer into a syringe and the pharmaceutical company using it for injectable drug products.

NOTE 1 Requirements are given in ISO 15378 and ISO 13485.

NOTE 2 Particular attention is drawn to change control procedures and notification of changes by suppliers of raw material.

6.2.3 Needle

6.2.3.1 If the sterilized subassembled syringe ready for filling is delivered with a staked needle, the requirements in 6.2.3.2 to 6.2.3.5 apply.

6.2.3.2 The needle shall fulfil the following material, dimensional, and design requirements:

— material and dimensions of the needle tubing shall be in accordance with ISO 9626; For tapered needles, needle manufacturers shall define how to apply the functional tests, specifically needle stiffness and resistance to breakage on the basis of a specific risk assessment carried out in accordance with ISO 14971;

— the bonding strength between the syringe and the needle shall be in accordance with ISO 7864;

— actual needle length shall be in accordance with ISO 7864:2016, Figure 2.

© ISO 2019 – All rights reserved
Copyright International Organization for Standardization
Provided by IHS Markit under license with ANSI
No reproduction or networking permitted without license from IHS
Licensee=Becton Dickinson - Loc 1 - 61, 64/5984713001, User=Chiu, Shelly
Not for Resale, 10/14/2019 19:11:42 MDT

When there are particular requirements on needle tip height from the flange or the shoulder, which are both common when a syringe with staked needle is used in injectors, the dimension should be agreed upon between the manufacturer and the customer.

Specific design features of the needle should be agreed upon between the manufacturer and the customer.

6.2.3.3 The needle shall be surface-treated using a lubricant (e.g. silicone oil).

NOTE 1 This is to minimize the pain when the needle penetrates the skin during injection.

For silicone oil, attention is drawn to applicable requirements in respective pharmacopoeias Ph. Eur.3.1.8, USP NF <<dimethicone>> and silicone oil standards.

Limit values on needle penetration force may need to be established using a risk assessment and usability engineering process.

Needle penetration force measurements can be useful to detect needle point and lubrication defects, but might not be correlated with injection pain.

NOTE 2 A suitable test method for the determination of the needle penetration force is given in Annex F.

6.2.3.4 The needle lumen patency shall be as specified in ISO 7864, if applicable.

6.2.3.5 If adhesive is used for fixing the needle inside the tip, attention is drawn to the requirements of relevant pharmacopoeias and/or other national or regional requirements. See also ISO 10993-1.

The fixation of the needle in the tip shall be tested in accordance with Clause G.1. This test method does not specify a limit for the pull-out force because this is subject to agreement between the manufacturer and the customer. See also limit values specified in ISO 7864.

6.2.4 Closure system

6.2.4.1 The material that can contact the injectable product shall meet applicable requirements of ISO 8871-1. For additional regional or national requirements of pharmacopoeias, see type I or type II requirements of Ph. Eur. 3.2.9, USP <381> and JP 7.03 that is applicable to volumes >100 ml.

6.2.4.2 The closure system shall allow for sterilization.

Conformity shall be demonstrated by suitable methods.

NOTE For ethylene oxide sterilization and/or steam sterilization, the design, including the material of the closure system, ensures that all components have sufficient ethylene oxide gas and water vapour permeation so that during sterilization, these gases reach both the cone of the Luer syringe and the needle through the sealing components.

The closure system shall provide an appropriate liquid leakage resistance when tested in accordance with G.2.

Limit values are subject to agreement between the manufacturer and the customer.

6.2.4.3 Luer conical fittings, if used, shall be in accordance with ISO 80369-7, ISO 80369-20, and ISO 80369-1.

6.2.4.4 Luer Lock Adaptor (LLA) collar systems shall withstand a pull-off force of at least 22 N when tested in accordance with G.3.

NOTE This pull-off force is consistent with the minimum needle pull-off force as specified in ISO 7864:2016, Table 2, for needles with an outer diameter of 0,5 mm and smaller.

© ISO 2019 – All rights reserved

Copyright International Organization for Standardization
Provided by IHS Markit under license with ANSI
No reproduction or networking permitted without license from IHS
Licensee=Becton Dickinson - Loc 1 - 61, 64/5984713001, User=Chiu, Shelly
Not for Resale, 10/14/2019 19:11:42 MDT

6.2.4.5 Luer Lock Adaptor (LLA) collar systems shall withstand a specified torque resistance when tested in accordance with G.4.

The minimum torque resistance is subject to agreement between the manufacturer and the customer.

6.2.4.6 The design of closure systems shall be such that

— tip caps (if used) can be removed from the syringe with a reasonable torque force,

— tip caps or needle shields (as applicable) can be removed from the syringe with a reasonable pull-off force, and

— tip caps or needle shields maintain the sterility of the Luer cone or needle.

The maximum allowed torque and the pull-off force, respectively, shall be agreed upon between the manufacturer and the customer.

The test(s) shall be performed in accordance with G.5 and G.6, respectively.

6.2.5 Closure system integrity

The components of sterilized subassembled syringes ready for filling shall provide sealing against each other during filling, applicable final sterilizations, and throughout storage and transport, also through or in different external air pressures.

Closure system integrity shall be demonstrated with a validated method. The dye solution tightness test in Annex H is a valuable method to test the tightness of a sterilized subassembled syringe ready for filling in the design development phase.

NOTE Deterministic methods such as helium-leakage, high voltage leak detection as well as probabilistic methods such as microbial ingress can be considered.

6.3 Physical requirements

6.3.1 Sterilization

Sterilized subassembled syringes ready for filling shall have been sterilized to a Sterility Assurance Level (SAL) of 10^{-6} using a suitable validated sterilization method (e.g. ISO 11135, ISO 17665-1, ISO 11137 (all parts) or ISO 14937).

6.3.2 Clarity and transparency

Clarity and transparency requirements before and after sterilization as well as test methodology need to be agreed upon between manufacturer and customer.

Any possible colouring, for example regarding light shielding, shall be agreed between the customer and the manufacturer of the primary packaging material.

6.3.3 Particulate contamination

Sterilized subassembled syringes ready for filling shall be manufactured by processes that reduce the risk of particulate contamination.

Current pharmacopoeias identify visible particulates as undesirable but do not define the size or put a limit on the allowable number. It is recommended that the manufacturer and the customer agree upon the size and number of visible particles and the test method.

The particle-related specifications given in pharmacopoeias (e.g. Ph. Eur., USP, JP) do not apply to empty containers.

© ISO 2019 – All rights reserved
Copyright International Organization for Standardization
Provided by IHS Markit under license with ANSI
No reproduction or networking permitted without license from IHS
Licensee=Becton Dickinson - Loc 1 - 61, 64/5984713001, User=Chiu, Shelly
Not for Resale, 10/14/2019 19:11:42 MDT

For sub-visible particles, the following applies:

— particles ≥10 µm: 600 max. per syringe;

— particles ≥25 µm: 60 max. per syringe.

NOTE 1 These limits have been derived from the USP <788> (small volume parenterals) limit values for filled containers with a nominal volume of less than 100 ml. The limit of the subassembly, which is 10 % of the USP <788>, supports the customer to fulfil the USP requirements on the syringe system. This value has been chosen based on historical proven capability using the light obscuration method as given in D.2.

NOTE 2 See also Ph. Eur. 2.9.19, Ph. Eur. 2.9.20, USP <788>, JP 6.06, as well as JP 6.07.

6.3.4 Lubricants

For silicone oil, attention is drawn to applicable quality and quantity requirements in respective pharmacopoeias. For other lubricants, appropriate in-house monographs shall be applied.

If the interior surfaces of the syringe barrel are lubricated, the lubricant shall not be visible, under normal or corrected-to-normal vision, as droplets or particles. Limit values and distribution of the amount of lubricant are subject to agreement between the manufacturer and the customer.

NOTE 1 Lubrication of the inner surface of the syringe barrel is applied in order to improve gliding properties. This is usually done by siliconization (e.g. by application of a high-viscosity silicone oil to the inner syringe surface or with silicone followed by curing treatment).

If silicone oil is used, attention is drawn to applicable requirements in respective pharmacopoeias pharmacopoeias Ph. Eur.3.1.8, USP NF <<dimethicone>>.

NOTE 2 Annex E includes a suitable test method for the determination of the quality and consistency of the lubrication using a gliding force test.

6.4 Chemical requirements

The materials used for manufacturing the syringes shall be chosen such that the risk of them releasing chemical constituents that can migrate into the injectables is minimized.

NOTE 1 For test methods, see regional or national pharmacopoeias or the EMA Guideline for chemical constituents of extracts[30].

For investigation of extractables of the sterilized sub-assembled syringe, the impact of all packaging materials around the syringe as provided to the customer shall be considered.

NOTE 2 The investigation can insure that printing inks or adhesive labels used on the polymer syringes do not affect the performance of the syringe and do not pose an unacceptable risk towards the contents and/or the patient.

6.5 Endotoxins and biological requirements

The material shall conform to biological requirements, i.e. toxic, cytotoxic, bacteriostatic, bactericidal, pyrogenic or haemolytic reactions.

NOTE 1 In many countries, national or regional pharmacopoeias, state regulations or standards specify in detail suitable tests for assessing biological safety. Examples are the Ph. Eur., USP and JP.

The required tests shall be agreed in accordance with ISO 10993-1 between the manufacturer of the primary packaging material and the customer.

For endotoxins, the limit value for syringes shall be <0,25 EU/ml considering the nominal volume according to Table 1.

NOTE 2 For rationale, see USP monograph on sterile water for injection according to USP <1231>.

--`,,,,`,,,,,`,`,`,,,,,```,`-`-`,,`,,`,`,,`---

Copyright International Organization for Standardization
Provided by IHS Markit under license with ANSI
No reproduction or networking permitted without license from IHS
Licensee=Becton Dickinson - Loc 1 - 61, 64/5984713001, User=Chiu, Shelly
Not for Resale, 10/14/2019 19:11:42 MDT

Extraction method and testing are specified in regional and national pharmacopoeias:

— for extraction method, see USP <161>;

— for testing, see Ph Eur, 2.6.14, method c), USP <85> and JP 4.01.

NOTE 3 A sample preparation is given in Annex D. This is based on applicable pharmacopoeias.

7 Graduation

If fill-lines or graduation marks are applied, ISO 7886-1 can be considered.

8 Packaging and labelling

For packaging systems and labelling requirements for sterilized subassembled syringes ready for filling, see ISO 11040-7.

Labelling of packaging of plastic barrels for injectables is subject to agreement between the manufacturer and the customer.

© ISO 2019 – All rights reserved
Copyright International Organization for Standardization
Provided by IHS Markit under license with ANSI
No reproduction or networking permitted without license from IHS
Licensee=Becton Dickinson - Loc 1 - 61, 64/5984713001, User=Chiu, Shelly
Not for Resale, 10/14/2019 19:11:42 MDT

Annex A
(informative)

Examples of types of sterilized subassembled syringes ready for filling

A.1 Components

Figure A.1 a) to Figure A.1 d) illustrate common components of sterilized subassembled syringes ready for filling.

© ISO 2019 – All rights reserved

Copyright International Organization for Standardization
Provided by IHS Markit under license with ANSI
No reproduction or networking permitted without license from IHS
Licensee=Becton Dickinson - Loc 1 - 61, 64/5984713001, User=Chiu, Shelly
Not for Resale, 10/14/2019 19:11:42 MDT

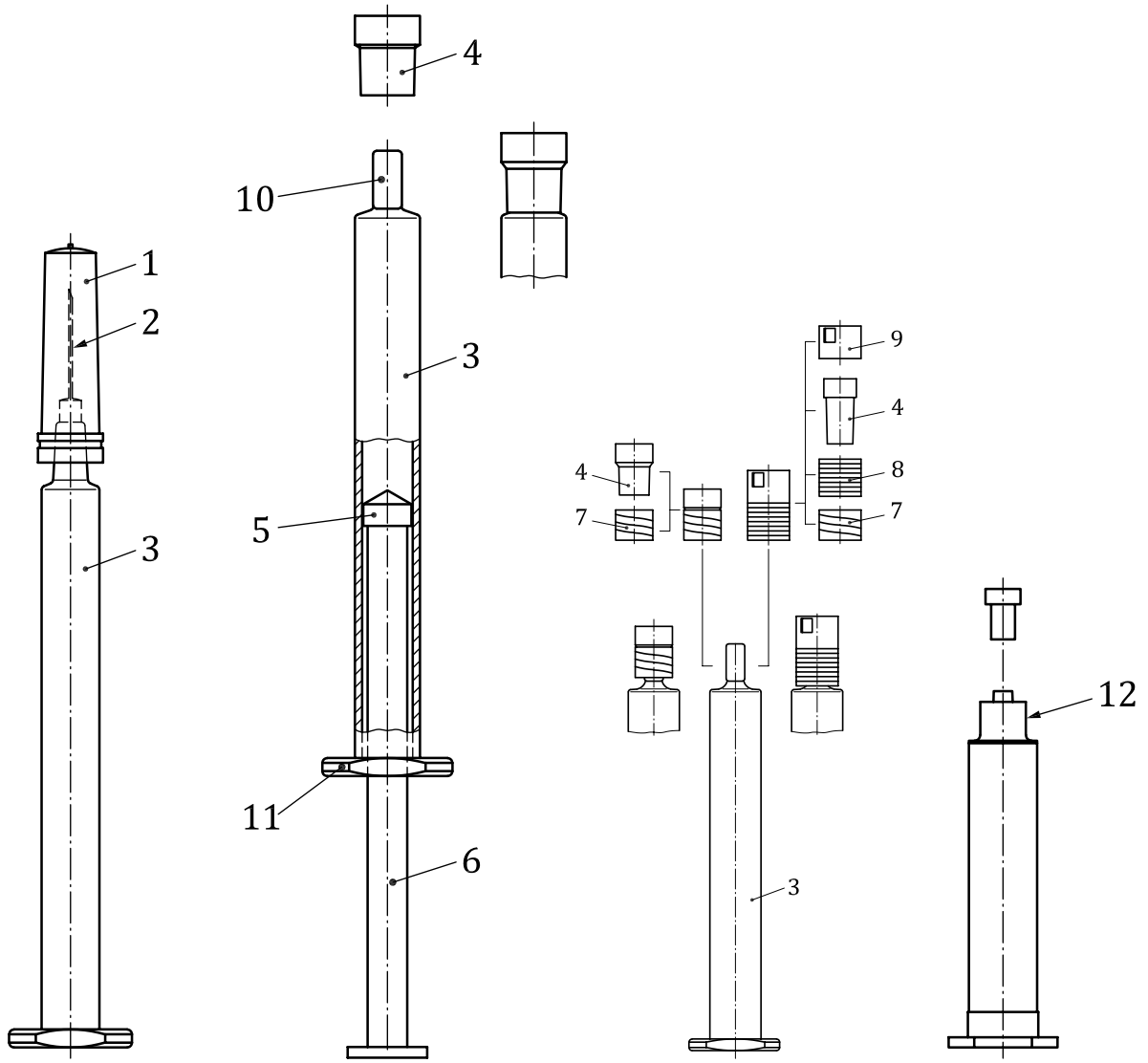

a) Syringe with staked needle **b) Syringe with Luer cone** **c) Syringe with Luer lock cone and Luer lock adaptor** **d) Syringe with integrated Luer lock**

Key

1 needle shield
2 needle
3 syringe barrel
4 tip cap
5 plunger
6 plunger rod
7 Luer lock adaptor
8 rigid sleeve
9 protective tamper-evident cap
10 front end of the syringe
11 back end of the syringe
12 integrated Luer lock

NOTE Plunger (5) and plunger rod (6) are not within the scope of this document.

Figure A.1 — Examples of sterilized subassembled syringes ready for filling including components of closure systems

© ISO 2019 – All rights reserved
Copyright International Organization for Standardization
Provided by IHS Markit under license with ANSI
No reproduction or networking permitted without license from IHS
Licensee=Becton Dickinson - Loc 1 - 61, 64/5984713001, User=Chiu, Shelly
Not for Resale, 10/14/2019 19:11:42 MDT

A.2 Description of closure systems

A.2.1 General

Closure components close the syringe such that the injectable product remains entirely enclosed and that microbiological contamination of the content of the syringe is avoided. The closure components are mounted onto the syringe body of the sterilized subassembled syringe ready for filling by the manufacturer. This subassembly is then packed in a suitable packaging system and then sterilized by ethylene oxide or another method.

The closure system can comprise of

— Luer cone, with or without lock, that can be closed using a tip cap, and

— needle and needle shield.

Examples are given in Figure A.1 a) to Figure A.1 d).

A.2.2 Closures for syringes with Luer cone in accordance with ISO 80369-7

Syringes with Luer cone are closed with a tip cap of an appropriate closure material.

For schematic illustration, see Figure A.1 b).

A.2.3 Closures for syringes with Luer lock adaptor in accordance with ISO 80369-7

Syringes with Luer lock adaptor are closed with a tip cap of an appropriate closure material which is, after assembly with a polymer Luer lock adapter comprising a thread standardized in accordance with ISO 80369-7, snapped onto the Luer cone of the syringe such that both parts together form the conical Luer lock.

These closure systems are available with or without tamper evidence in various designs.

For schematic illustration, see Figure A.1 c).

A.2.4 Closures for syringes with integrated Luer lock in accordance with ISO 80369-7

Syringes with integrated Luer Lock are closed with a tip cap of an appropriate closure material.

For schematic illustration, see Figure A.1 d).

A.2.5 Syringe with staked needle

Syringes with a staked needle are closed with a needle shield or rigid needle shield.

It is important that the needle tip, and particularly the opening of this tip, is completely embedded into the elastomer of the needle shield to ensure sealing.

For schematic illustration, see Figure A.1 a).

© ISO 2019 – All rights reserved

Copyright International Organization for Standardization
Provided by IHS Markit under license with ANSI
No reproduction or networking permitted without license from IHS
Licensee=Becton Dickinson - Loc 1 - 61, 64/5984713001, User=Chiu, Shelly
Not for Resale, 10/14/2019 19:11:42 MDT

Annex B
(informative)

Head designs

Figure B.1 shows a head design of a barrel for syringe with staked needle.

a Depending on needle diameter.

NOTE Bore can also be cylindrical.

Figure B.1 — Model A: Head design of a barrel for syringe with staked needle

Figure B.2 shows a head design of a barrel with a 6 % Luer cone according to ISO 80369-7.

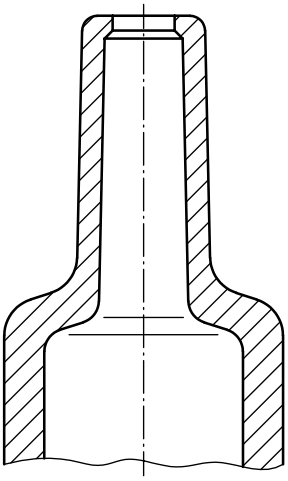

Figure B.2 — Model B: Head design of a barrel with a 6 % Luer cone according to ISO 80369-7

Figure B.3 shows a head design of a barrel with a 6 % Luer cone for Luer Lock according to ISO 80369-7.

--`,,,,`,,,,,`,`,`,,,,,`,`,`,`,,`,`-`-`,,`,,`,`,,`---

© ISO 2019 – All rights reserved
Copyright International Organization for Standardization
Provided by IHS Markit under license with ANSI
No reproduction or networking permitted without license from IHS
Licensee=Becton Dickinson - Loc 1 - 61, 64/5984713001, User=Chiu, Shelly
Not for Resale, 10/14/2019 19:11:42 MDT

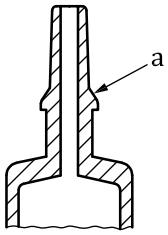

a To be agreed upon between the manufacturer and the customer.

NOTE Particular requirements on Luer tip height from the flange or shoulder, which both are common when a syringe is used in injectors, are subject to agreement between the manufacturer and the customer.

Figure B.3 — Model C: Head design of a barrel with a 6 % Luer cone for Luer Lock according to ISO 80369-7

Figure B.4 shows a head design of a barrel with an integrated Luer Lock according to ISO 80369-7.

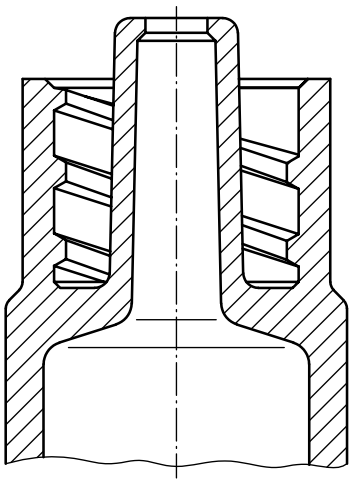

Figure B.4 — Model D: Head design of a barrel with an integrated Luer Lock according to ISO 80369-7

© ISO 2019 – All rights reserved

Copyright International Organization for Standardization
Provided by IHS Markit under license with ANSI
No reproduction or networking permitted without license from IHS
Licensee=Becton Dickinson - Loc 1 - 61, 64/5984713001, User=Chiu, Shelly
Not for Resale, 10/14/2019 19:11:42 MDT

Annex C
(normative)

Test methods for syringe barrels

C.1 Flange breakage resistance

C.1.1 Principle

The test is used to determine the flange breakage resistance by applying a force on a syringe barrel that has been placed in a cylinder holder under the flange.

C.1.2 Materials

Syringe barrels to be tested, numbers as required.

C.1.3 Apparatus

C.1.3.1 Universal tensile and compression testing machine, (attention shall be paid on bench overall rigidity for high-level resistance) in accordance with the following:

— load cell 2 500 N or as appropriate to the force to be measured;

— test speed of 100 mm/min or as appropriate;

— sampling rate of at least 100 Hz.

NOTE Definition of load cell, test speed, and sampling rate is subject to agreement between the manufacturer and the customer.

C.1.3.2 Syringe holder, made of an appropriate material [e.g. polyether ether ketone, (PEEK)] or stainless steel and of appropriate dimensions.

Materials and design depend upon the intended use. This is subject to agreement between the manufacturer and the customer. Table C.1 and Figure C.1 include examples for dimensions of a syringe holder.

Table C.1 — Examples for dimensions of the syringe holder and loading pin

Dimensions in millimetres

Syringe barrel outer diameter (OD)	Diameter *A* (see Figure C.1)	Diameter *b* (see Figure C.2)	Radius *c* (see Figure C.2)
OD	OD + 0,5	80% of inner diameter of syringe (ID)	$b/2$

© ISO 2019 – All rights reserved
Copyright International Organization for Standardization
Provided by IHS Markit under license with ANSI
No reproduction or networking permitted without license from IHS
Licensee=Becton Dickinson - Loc 1 - 61, 64/5984713001, User=Chiu, Shelly
Not for Resale, 10/14/2019 19:11:42 MDT

Dimensions in millimetres

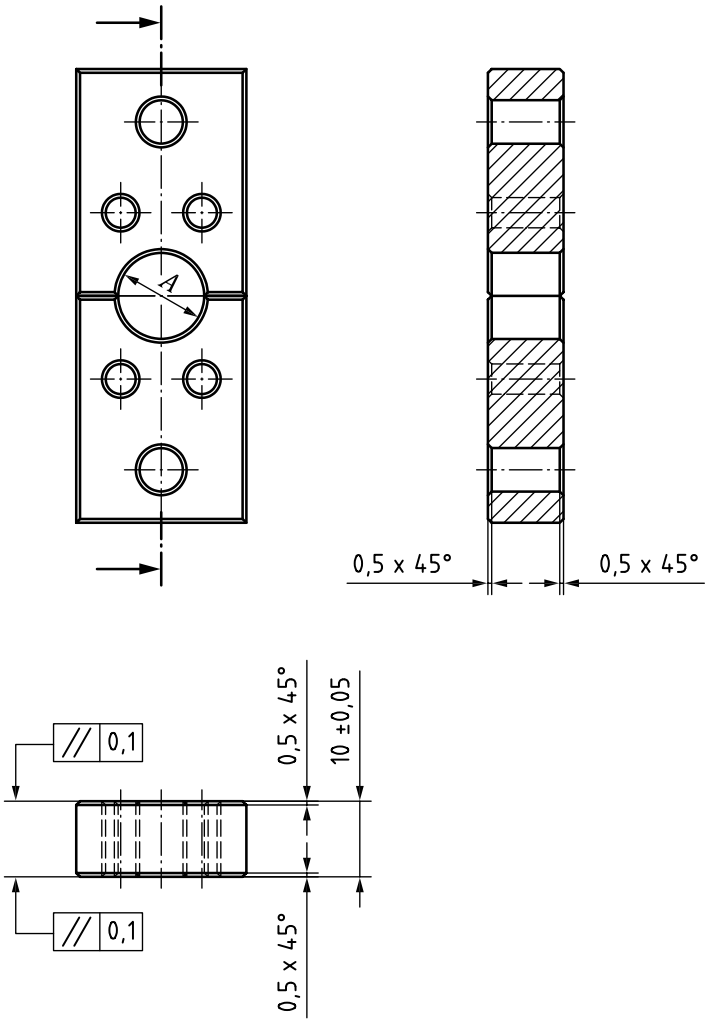

NOTE For diameter *A*, see Table C.1

Figure C.1 — Example of a syringe holder

C.1.3.3 Loading pin, made of an appropriate material and of appropriate dimensions.

NOTE 1 Materials and design (e.g. radius of curvature adjusted to the internal syringe shoulder design) depend upon the intended use. This is subject to the agreement between the manufacturer and the customer. Table C.1 and Figure C.2 include examples for dimensions of the loading pin.

NOTE 2 Polyacetale, shore hardness D according to ISO 7619-1 between 80 and 90 is a suitable material of the contact area of the loading pin. The rod can be made of stainless steel.

C.1.4 Preparation and preservation of test samples

Attention shall be paid not to shock the test samples before testing.

Inspect the syringe holder and the loading pin for damage prior to testing and change regularly.

C.1.5 Procedure

C.1.5.1 Place the syringe barrel to be tested in the syringe holder and position the loading pin close to the syringe barrel depth as illustrated in Figure C.2.

--`,,,,`,,,,,`,`,`,,,,,,```,`-`-`,,`,`,`,,`---

Copyright International Organization for Standardization
Provided by IHS Markit under license with ANSI
No reproduction or networking permitted without license from IHS
Licensee=Becton Dickinson - Loc 1 - 61, 64/5984713001, User=Chiu, Shelly
Not for Resale, 10/14/2019 19:11:42 MDT

Dimensions in millimetres

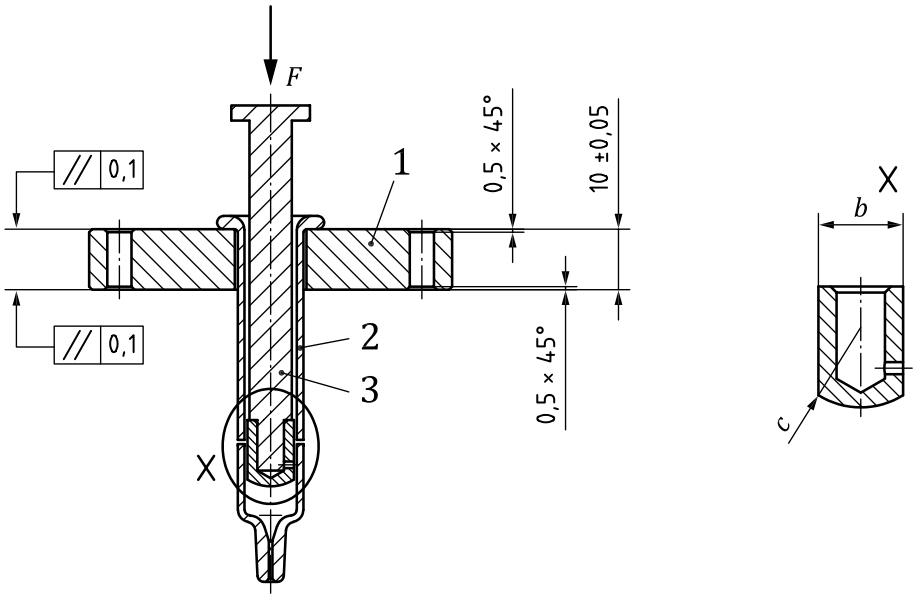

Key

1 syringe holder

2 syringe barrel

3 loading pin

NOTE For diameter *b* and radius *c*, see Table C.1.

Figure C.2 — Placement of the syringe barrel and the loading pin

C.1.5.2 Start the test by applying a test speed of 100 mm/min or as appropriate and a sampling rate of at least 100 Hz.

C.1.5.3 Record the force versus displacement and prepare a graph. An example is given in Figure C.3.

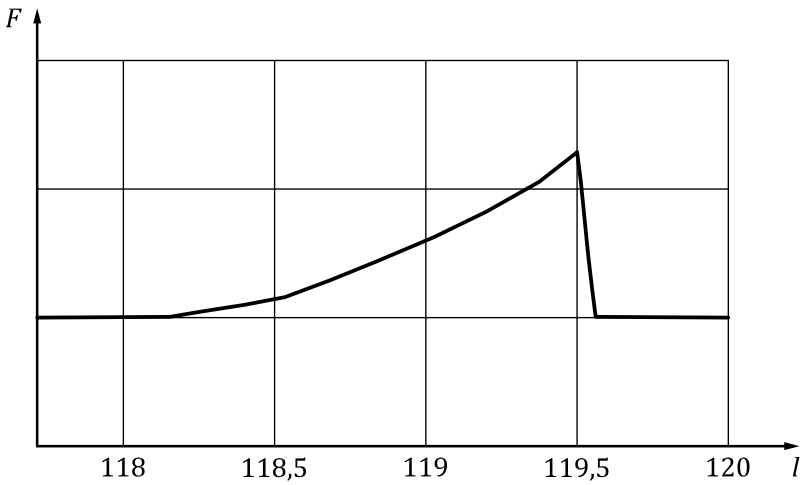

Key

F force in newtons

l distance in millimetre

Figure C.3 — Example of a force versus displacement curve

--`,,,,`,,,,,`,`,`,,,,,`,,`,`-`-`,,`,,`,`,,`---

© ISO 2019 – All rights reserved
Copyright International Organization for Standardization
Provided by IHS Markit under license with ANSI
No reproduction or networking permitted without license from IHS
Licensee=Becton Dickinson - Loc 1 - 61, 64/5984713001, User=Chiu, Shelly
Not for Resale, 10/14/2019 19:11:42 MDT

C.1.6 Expression of results

Determine the peak value from the displacement curve. This corresponds to the flange resistance (flange strength).

C.1.7 Test report

The test report shall include the following:

— the test speed (mm/min);

— the sampling rate (Hz);

— the peak value from the force versus displacement curve for each sample (N);

— the numbers of samples tested;

— any deviations or observations.

C.2 Luer cone breakage resistance

C.2.1 Principle

Many Luer syringes are equipped with a Luer connector. Especially for syringes with diluents or syringes for water for injections, the Luer connector is often used to connect to a vial adapter in order to provide a safe reconstitution of a lyophilized vial.

This subassembly (syringe barrel, vial adapter and vial) is big in axial size and therefore, during reconstitution and handling charged by mechanical load through the user. The weakest point of this subassembly is the front end of the syringe that can be charged by a side load.

The Luer cone breakage resistance test is used to determine the strength of the cone that is determined by the geometry and plastic material characteristics.

C.2.2 Materials

Luer syringe barrels to be tested, numbers as required.

C.2.3 Apparatus

C.2.3.1 Universal tensile and compression testing machine, (attention shall be paid on bench overall rigidity for high-level resistance) in accordance with the following:

— load cell 2 500 N or as appropriate to the force to be measured;

— test speed of 25 mm/min or as appropriate;

— sampling rate of at least 100 Hz.

NOTE Definition of load cell, test speed, and sampling rate is subject to agreement between the manufacturer and the customer.

C.2.3.2 Material holder and loading pin made of stainless steel, for dimensions, see Figure C.4.

© ISO 2019 – All rights reserved

Copyright International Organization for Standardization
Provided by IHS Markit under license with ANSI
No reproduction or networking permitted without license from IHS
Licensee=Becton Dickinson - Loc 1 - 61, 64/5984713001, User=Chiu, Shelly
Not for Resale, 10/14/2019 19:11:42 MDT

Dimensions in millimetres

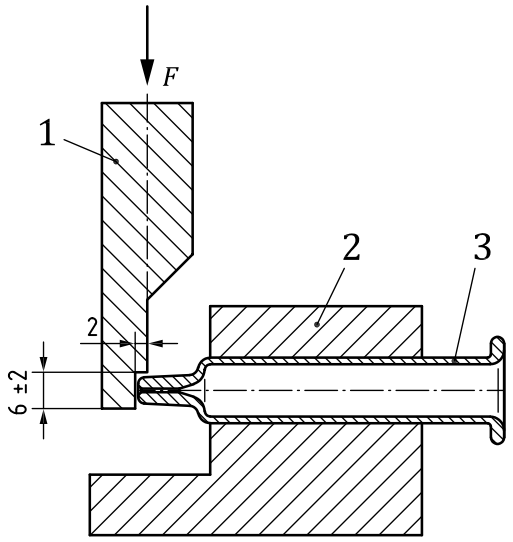

Key

1 compression testing machine with loading pin

2 syringe holder

3 syringe barrel

Figure C.4 — Example of a tensile and compression testing machine including holder with the syringe barrel inserted

C.2.3.3 Adapter set which fits syringe geometries.

C.2.4 Procedure

C.2.4.1 Set up the test apparatus as follows:

— Check the adapters for damage and correctness.

— Assemble the adapters to the tensile and compression testing machine.

— Check for security elements, plastic breakage will occur.

— Install and open correct software to the tensile and compression testing machine, if required.

C.2.4.2 Perform the test as follows:

— Place the syringe barrel in the tensile and compression testing machine (see Figure C.4.).

— Close the security elements.

— Start the measurement applying a test speed of 25 mm/min, or as appropriate, and a sampling rate of at least 100 Hz.

— Charge the syringe barrel until cone breaks; apply the force at a distance of approximately 2 mm from the tip of the syringe barrel.

— Remove the syringe barrel from the adapter.

— Clean the adapter from plastic residues.

— Make sure that it breaks at the tip.

© ISO 2019 – All rights reserved
Copyright International Organization for Standardization
Provided by IHS Markit under license with ANSI
No reproduction or networking permitted without license from IHS
Licensee=Becton Dickinson - Loc 1 - 61, 64/5984713001, User=Chiu, Shelly
Not for Resale, 10/14/2019 19:11:42 MDT

C.2.5 Expression of results

Record the maximum force at which the Luer cone breaks.

C.2.6 Test report

The test report shall include the following:

— the test speed (mm/min);

— the sampling rate (Hz); (the higher the sampling rate the more accurate the results);

— distance from the tip of the point where the syringe is charged (mm); (approximately 2 mm);

— maximum force at breakage (N);

— the numbers of samples tested;

— any deviations or observations.

--`,,,,`,,,,,`,`,`,,,,,``,`-`-`,,`,,`,`,,`---

Copyright International Organization for Standardization
Provided by IHS Markit under license with ANSI
No reproduction or networking permitted without license from IHS
Licensee=Becton Dickinson - Loc 1 - 61, 64/5984713001, User=Chiu, Shelly
Not for Resale, 10/14/2019 19:11:42 MDT

Annex D
(informative)

Sample preparation for endotoxin and particulate determination

D.1 Endotoxins

D.1.1 General

The sample preparation for endotoxin determination is based on the following documents:

— Guidance for industry, pyrogen and endotoxins testing, questions and answers;

— USP <161>;

— USP <85>;

— AAMI ST72:2011.

D.1.2 Materials and equipment

D.1.2.1 Sterilized syringes (i.e. sterilized by ethylene oxide or moist heat), not less than 3 and not more than 10 syringes.

D.1.2.2 Plunger stopper, endotoxin-free or has a vendor-certified maximum endotoxin level.

D.1.2.3 Endotoxin-free water of injection or *Limulus Amebocyte Lysate (LAL)* reagents, as extraction fluid having a temperature of (37 ± 1) °C.

D.1.2.4 Shaker.

D.1.2.5 Endotoxin-free container.

D.1.3 Procedure

D.1.3.1 Protect the endotoxin-free container from environmental contamination until analyzed, i.e. work in a controlled environment such as ISO 5 according to ISO 14644-1.

D.1.3.2 Fill the syringes with extraction fluid up to the nominal fill volume of the syringe.

D.1.3.3 Close the syringes with the plunger stopper.

D.1.3.4 Store the filled and closed syringes for not less than 1 h at least at room temperature.

D.1.3.5 Shake the syringes vigorously for 10 min on a horizontal shaker (or similar device).

D.1.3.6 Pool the extract into an endotoxin-free container by pushing the plunger stopper and empty the syringes through the front end (Luer cone, staked needle).

© ISO 2019 – All rights reserved
Copyright International Organization for Standardization
Provided by IHS Markit under license with ANSI
No reproduction or networking permitted without license from IHS
Licensee=Becton Dickinson - Loc 1 - 61, 64/5984713001, User=Chiu, Shelly
Not for Resale, 10/14/2019 19:11:42 MDT

D.1.3.7 Determine the number of endotoxin units (EU/ml) of the extract using the method as given in USP <85> including "positive" and "negative" samples.

The limit of the extraction fluid can be calculated according to USP <161> using Formula (D.1):

$$\frac{K \times N}{V} \tag{D.1}$$

where

K is the amount of endotoxin allowed per syringe;

N is the number of devices tested;

V is the total volume of extract rinse.

Ensure that the sensitivity of test reagent is high enough to allow a proper detection limit of endotoxins for pooled samples.

EXAMPLE For 1 ml nominal fill volume and an endotoxin limit <0,25 EU/ml and a sensitivity of the reagent of 0,02 EU/ml, the "alarm" limit for 10 pooled syringes would be 0,20 EU/ml which is <0,25 EU/ml.

D.2 Particulates

D.2.1 General

The sample preparation for particulate matter determination is based on USP <788> and Ph. Eur. 2.9.19.

D.2.2 Materials and equipment

D.2.2.1 **Sterilized syringes** (i.e. sterilized by ethylene oxide or moist heat), numbers as required.

D.2.2.2 **Plunger stopper and plunger rod**, numbers as required.

D.2.2.3 **Water**, for injection or any grade of purified water.

D.2.2.4 **Container**.

D.2.3 Procedure

D.2.3.1 Protect the container from environmental contamination until analyzed, i.e. work in a controlled environment, e.g. ISO 5 according to ISO 14644-1.

D.2.3.2 Prepare particle-free water by filtration of water for injection or any grade of purified water through a 0,2 µm to 0,8 µm filter unit.

D.2.3.3 Rinse all the needed equipment (e.g. beakers, dosage systems) with particle-free water.

D.2.3.4 Transfer a minimum of 30 ml of particle-free water into a cleaned container and let it rest undisturbed for a minimum of 2 min to allow degassing of air bubbles.

D.2.3.5 Determine the particle content of the particle-free water but disregard the first measurement as it is only used to clean the measurement system.

--`,,,`,,,,,`,`,`,,,,,`,`,`,`,,`,`,`,,`---

© ISO 2019 – All rights reserved

Copyright International Organization for Standardization
Provided by IHS Markit under license with ANSI
No reproduction or networking permitted without license from IHS
Licensee=Becton Dickinson - Loc 1 - 61, 64/5984713001, User=Chiu, Shelly
Not for Resale, 10/14/2019 19:11:42 MDT

D.2.3.6 The limits for the particle-free water by light obscuration are

— 10 particles ≥10 µm, and

— 2 particles ≥25 µm.

If the particle content is within the limit, continue with the sample preparation.

If the particle content is not within the limit, repeat the filtration and measurement until the particle-free water is within specification (D.2.3.2 to D.2.3.5).

D.2.3.7 Fill the syringes with nominal volume and close with clean plunger stopper.

D.2.3.8 Invert the syringes 20 times.

NOTE It can be necessary to agitate the solution more vigorously to suspend the particles properly.

D.2.3.9 Remove the tip cap/needle shield and dispense the contents of the syringes into a cleaned container by depressing the plunger with a plunger rod.

D.2.3.10 Let the solution rest un-disturbed for a minimum of 2 min to allow degassing of air bubbles.

D.2.3.11 Determine the particle content per syringe but disregard the first measurement as it is only used to clean the measurement system.

The limits for the containers by light obscuration are

— 600 particles ≥10 µm, and

— 60 particles ≥25 µm

NOTE A minimum pooled sample volume of 25 ml is needed to perform four runs of 5 ml each. The first run is always discarded. The average is calculated for the remaining three test runs. Depending on the nominal fill volume of the syringes, a certain amount of syringes is needed for 1 pool:

— 25 syringes 1 ml 25 ml pool;

— 13 syringes 2 ml 25 ml pool;

— 12 syringes 2,25 ml 25 ml pool;

— 9 syringes 3 ml 25 ml pool;

— 5 syringes 5 ml 25 ml pool.

To avoid air bubbles in the measuring device, it is recommended to add an extra 5 ml to the pool (30 ml pool volume).

Depending on the batch size of the syringes produced, multiple pools can be required.

The number of particles in each container can be calculated using Formula (D.2):

$$\frac{P \times V_t}{V_a \times n} \tag{D.2}$$

© ISO 2019 – All rights reserved
Copyright International Organization for Standardization
Provided by IHS Markit under license with ANSI
No reproduction or networking permitted without license from IHS
Licensee=Becton Dickinson - Loc 1 - 61, 64/5984713001, User=Chiu, Shelly
Not for Resale, 10/14/2019 19:11:42 MDT

where

P is the average particle count obtained from the portion of container;

V_t is the volume of pooled sample (ml);

V_a is the nominal volume of the syringe (ml);

n is the number of containers pooled.

© ISO 2019 – All rights reserved

Copyright International Organization for Standardization
Provided by IHS Markit under license with ANSI
No reproduction or networking permitted without license from IHS
Licensee=Becton Dickinson - Loc 1 - 61, 64/5984713001, User=Chiu, Shelly
Not for Resale, 10/14/2019 19:11:42 MDT

Annex E
(informative)

Evaluation of syringe lubrication by glide force test method

E.1 Purpose

This test method is used to assess the quality and consistency of lubrication within the inner syringe barrel by measuring the glide force of the empty syringe barrel. The ability to assess the quality and consistency of lubrication can be dependent on the test speed used.

NOTE Typically, a test speed of 100 mm/min (similar to ISO 7886-1) is used; however, it can be insufficient to detect lubrication defects. The test speed is subject to agreement between the manufacturer and the customer.

Break loose force is not part of this test method because break loose force is applicable to the syringe (complete system).

E.2 Materials

E.2.1 Empty sterilized subassembled syringes ready for filling, adequate sample size corresponding to the sampling plan in 4.2.2 is required.

E.2.2 Plunger stoppers (piston) in ready-to-use format, to be agreed upon between the manufacturer and the customer (dimensions, compound, siliconization level, sterilization).

E.2.3 Plunger rods, appropriate for use with selected plunger stopper, to be agreed upon between the manufacturer and the customer.

E.3 Apparatus

E.3.1 Universal tensile and compression testing machine in accordance with the following:

— test speed of 100 mm/min or as appropriate;

— force range up to 50 N or as appropriate;

— sampling rate as appropriate

NOTE Definition of test speed and force range is subject to agreement between the manufacturer and the customer.

E.3.2 Syringe support stand and syringe adaptor plates, appropriately sized for the sterilized subassembled syringes ready for filling to be tested.

E.3.3 Vent tube stoppering tool or machine.

© ISO 2019 – All rights reserved
Copyright International Organization for Standardization
Provided by IHS Markit under license with ANSI
No reproduction or networking permitted without license from IHS
Licensee=Becton Dickinson - Loc 1 - 61, 64/5984713001, User=Chiu, Shelly
Not for Resale, 10/14/2019 19:11:42 MDT

E.4 Procedure

E.4.1 Set the plunger stopper in the empty syringe barrel by using the vent tube insertion method. Select stopper position(s) based on the following areas of concern:

— focus on front portion of barrel; sensitive area for auto-injector performance: Select a position corresponding to 50 % of nominal fill volume (e.g. 27 mm from back of barrel flange to back of plunger stopper, 1 ml-long syringe);

— characterization of entire barrel: Select a position corresponding to nominal fill volume (e.g. 10 mm from back of barrel flange to back of plunger stopper, 1 ml-long syringe).

E.4.2 Install the plunger rod into or onto the plunger-stopper.

NOTE The plunger rod can be with or without thread.

E.4.3 Remove the needle shield or other front closure from the sterilized subassembled syringe ready for filling.

E.4.4 Place the sterilized subassembled syringe ready for filling in the adaptor plate on the force-measurement instrument.

E.4.5 Start the compression at the designated speed.

E.4.6 End the test when the plunger stopper comes into contact with the shoulder of the syringe barrel.

E.4.7 Repeat the steps E.4.1 to E.4.6 for additional test samples.

E.4.8 Record the maximum force in the glide force test region (see footnote b in Figure E.1). The glide force test region is defined as the region between the break loose and the sharp increase of the force at the end of the stroke. See Figure E.1.

Limit values should be agreed between the manufacturer and the customer.

--`,,,,`,,,,,`,`,`,,,,,``,`-`-`,,`,`,`,,`---

Copyright International Organization for Standardization
Provided by IHS Markit under license with ANSI
No reproduction or networking permitted without license from IHS
Licensee=Becton Dickinson - Loc 1 - 61, 64/5984713001, User=Chiu, Shelly
Not for Resale, 10/14/2019 19:11:42 MDT

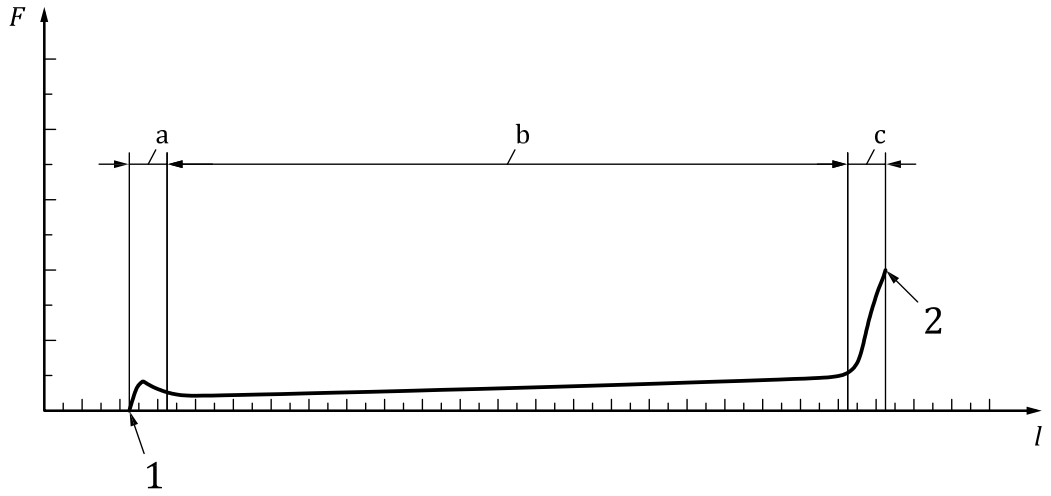

Key

1 start of stopper movement

2 end of testing condition

F force in newtons

l distance in millimetre

a Break loose region.

b Glide force test region.

c End of stroke region.

Figure E.1 — Example illustrating gliding characteristics

E.5 Test report

The test report should include the following:

— maximum gliding force in the glide force test region (footnote b) (N);

— sampling rate (Hz);

— calculated average gliding force (N);

— numbers of tested samples;

— any deviations or observations.

© ISO 2019 – All rights reserved
Copyright International Organization for Standardization
Provided by IHS Markit under license with ANSI
No reproduction or networking permitted without license from IHS
Licensee=Becton Dickinson - Loc 1 - 61, 64/5984713001, User=Chiu, Shelly
Not for Resale, 10/14/2019 19:11:42 MDT

Annex F
(informative)

Needle penetration test

F.1 Principle

This test method is used to determine the needle penetration force by piercing a test foil with a needle. The test has been derived from ISO 7864.

F.2 Apparatus

F.2.1 Universal tensile and compression testing machine in accordance with the following:

— measuring range up to 50 N or as appropriate;

— test speed within the range 20 mm/min to 200 mm/min or as appropriate;

— sampling rate as appropriate.

NOTE Definition of measuring range and test speed is subject to agreement between the manufacturer and the customer.

F.2.2 Needle holder.

F.3 Materials

F.3.1 Test foil, specification to be agreed upon between the manufacturer and the customer.

F.3.2 Syringes with a staked needle as supplied, i.e. siliconized.

F.4 Procedure

F.4.1 Fix the test foil tension-free in the holder.

F.4.2 Fix the needle in the needle holder perpendicular to the test foil and with the tip to the geometric centre of the free area of the test foil.

F.4.3 Start the test and penetrate the test foil with the needle.

F.4.4 Record the force versus displacement curve.

© ISO 2019 – All rights reserved

Copyright International Organization for Standardization
Provided by IHS Markit under license with ANSI
No reproduction or networking permitted without license from IHS
Licensee=Becton Dickinson - Loc 1 - 61, 64/5984713001, User=Chiu, Shelly
Not for Resale, 10/14/2019 19:11:42 MDT

F.4.5 Use a new (not perforated) foil section for each penetration test.

Examples on penetration force behaviour and force versus displacement curve are given in Figure F.1 and Figure F.2.

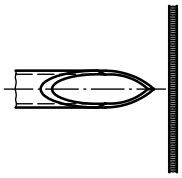	1. The needle tip meets the test foil.	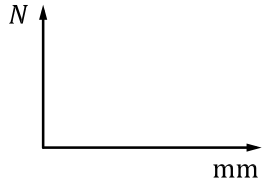
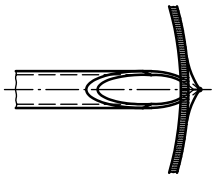	2. The tip presses the foil, the force increases to *F*0.	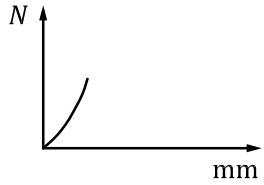
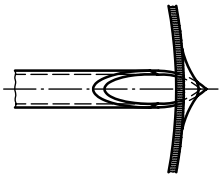	3. The tip penetrates the foil, the cutting phase starts.	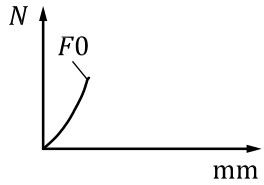
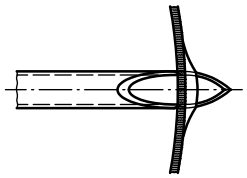	4. The cutting edges make the cut.	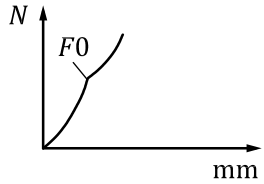
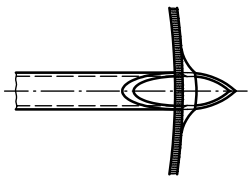	5. The cut is finished with the force maximum *F*1.	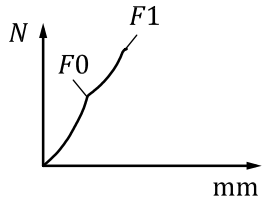
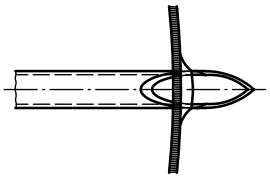	6. Dilatation of the cut via the primary bevel.	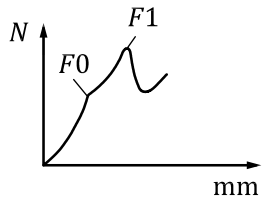
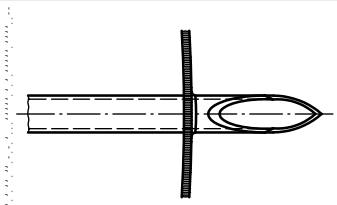	7. Heel passes the foil, the force with maximum *F*2.	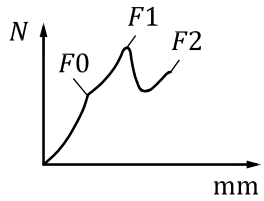
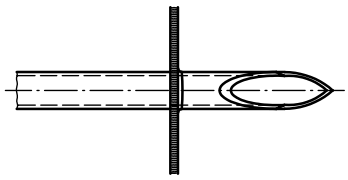	8. The needle tube slides through the enlarged cut.	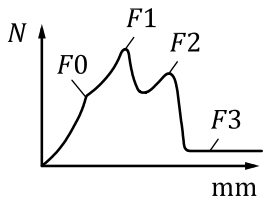

Figure F.1 — Stages of the penetration process

© ISO 2019 – All rights reserved
Copyright International Organization for Standardization
Provided by IHS Markit under license with ANSI
No reproduction or networking permitted without license from IHS
Licensee=Becton Dickinson - Loc 1 - 61, 64/5984713001, User=Chiu, Shelly
Not for Resale, 10/14/2019 19:11:42 MDT

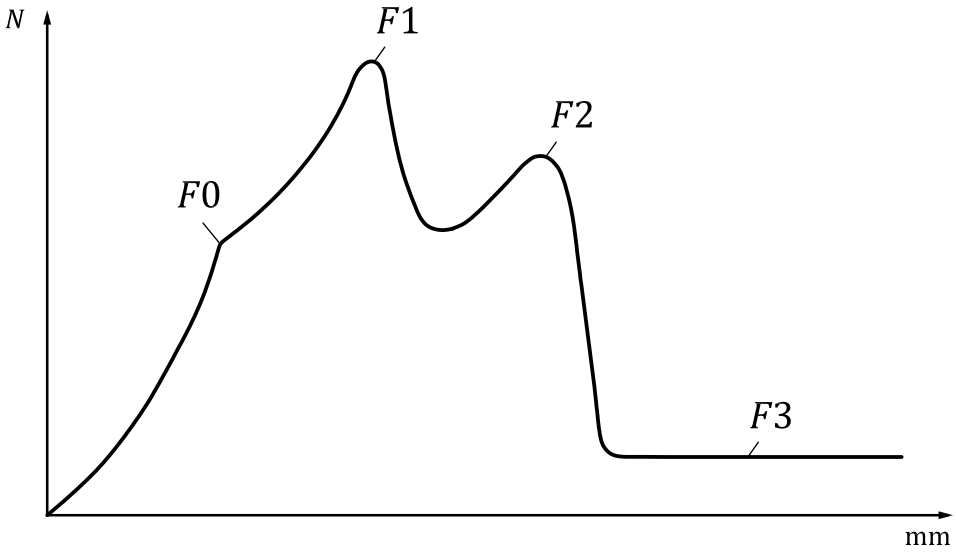

Key

*F*0 force for passing the tip (piercing force)

*F*1 force for cutting with the cutting edges (cutting force)

*F*2 force where the heel passes the foil

*F*3 drag penetration force

NOTE The illustration given is an example only. This curve might not be representative of all needles and test foils.

Figure F.2 — Example of a force versus displacement curve

F.5 Test report

The test report should include the following:

— specification of the test foil;

— test speed (mm/min);

— sampling rate (Hz);

— force versus displacement curves;

— numbers of tested samples;

— any deviations or observations.

© ISO 2019 – All rights reserved

Copyright International Organization for Standardization
Provided by IHS Markit under license with ANSI
No reproduction or networking permitted without license from IHS
Licensee=Becton Dickinson - Loc 1 - 61, 64/5984713001, User=Chiu, Shelly
Not for Resale, 10/14/2019 19:11:42 MDT

Annex G
(normative)

Test methods for syringe closure systems

G.1 Needle pull-out force

G.1.1 Principle

The test is used to assess the fixation of the needle to the staked needle syringe.

It is mainly designed to verify whether the needle fixation process is appropriate to show that the staked needle withstands a needle size (gauge) dependent pull-out force according to ISO 7864.

G.1.2 Materials

Sterilized subassembled syringes ready for filling with a staked needle, numbers as required.

G.1.3 Apparatus

G.1.3.1 Universal tensile and compression testing machine in accordance with the following:

— load cell of max 500 N or as appropriate for the force to be measured;

— test speed of 50 mm/min or as appropriate;

— sampling rate of minimum 65 Hz.

NOTE Definition of load cell, test speed, and sampling rate is subject to agreement between the manufacturer and the customer.

G.1.3.2 Syringe holder (syringe can be fixed by shoulder or finger flange during testing).

G.1.3.3 Needle gripper device, designed to avoid slippage and to avoid an influence on the measurement itself.

G.1.4 Preparation and preservation of test samples

The test samples shall follow the same process as the product delivered.

© ISO 2019 – All rights reserved
Copyright International Organization for Standardization
Provided by IHS Markit under license with ANSI
No reproduction or networking permitted without license from IHS
Licensee=Becton Dickinson - Loc 1 - 61, 64/5984713001, User=Chiu, Shelly
Not for Resale, 10/14/2019 19:11:42 MDT

G.1.5 Procedure

G.1.5.1 Insert the test sample vertically positioned on the testing machine (see Figure G.1).

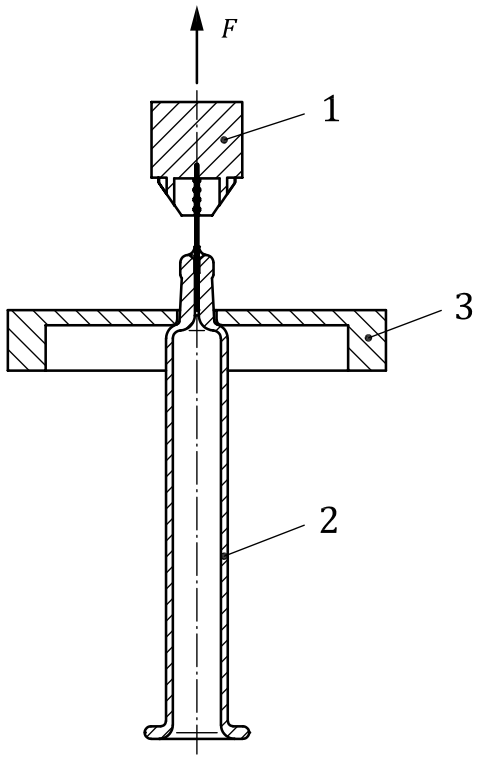

Key

1 needle gripper attached to a testing machine

2 syringe with staked needle

3 syringe holder/base plate

F force in newtons

Figure G.1 — Position of the test sample in the tensile testing machine

G.1.5.2 Grip as much as possible of the needle to avoid slippage.

G.1.5.3 Release the test sample.

G.1.5.4 Set the load cell to “zero”. Attention shall be paid that no significant pre-load is applied when the “zero” is set.

G.1.5.5 Apply a test speed of 50 mm/min or as appropriate, at an appropriate sampling rate (Hz).

G.1.5.6 Start the test.

G.1.5.7 Record the force versus displacement.

G.1.5.8 Stop the test once the needle is clearly removed from the syringe or broken.

© ISO 2019 – All rights reserved

Copyright International Organization for Standardization
Provided by IHS Markit under license with ANSI
No reproduction or networking permitted without license from IHS
Licensee=Becton Dickinson - Loc 1 - 61, 64/5984713001, User=Chiu, Shelly
Not for Resale, 10/14/2019 19:11:42 MDT

G.1.6 Expression of results

Record the maximum load peak from the force versus displacement curve. This corresponds to the pull-out force of the needle system of the syringe.

G.1.7 Test report

The test report shall include the following:

— test speed (mm/min);

— sampling rate (Hz);

— force versus displacement curve;

— peak value according to the maximum force (N);

— number of tested samples;

— any deviations or observations.

G.2 Syringe closure system liquid leakage test

G.2.1 Principle

The test is used to assess the liquid leakage resistance of the closure systems (needle shield or tip cap/barrel assembly).

It is mainly designed to verify whether the closure system is able to withstand any potential overpressure inside the syringe during the filling process or during transportation.

The test pressure of 110 kPa has been selected based on process conditions during the fill finish process.

G.2.2 Reagents and materials

G.2.2.1 Reagents of recognized analytical grade and distilled water or water of equivalent purity.

G.2.2.2 Sterilized subassembled syringes ready for filling, numbers as required.

G.2.3 Apparatus

G.2.3.1 Universal tensile and compression testing machine or pressurization through the application of compressed air.

NOTE Application of pressure via universal tensile and testing machine [see Figure G.2 a)] is preferred when wall friction can be neglected. In this case, it is assumed that equilibrium is reached between the applied force and the internal pressure. If wall friction cannot be neglected, preference is given to the test as indicated in Figure G.2 b) where the pressures are applied on the closure system through the application of compressed air on the filled media.

G.2.3.2 Syringe holder.

G.2.3.4 Plunger stopper and plunger rod.

G.2.4 Preparation and preservation of test samples

The retention time/waiting time between closure setting and leakage testing shall be at least 12 h. Attention shall be paid not to damage and/or loosen the closure system/syringe tip prior to testing.

© ISO 2019 – All rights reserved
Copyright International Organization for Standardization
Provided by IHS Markit under license with ANSI
No reproduction or networking permitted without license from IHS
Licensee=Becton Dickinson - Loc 1 - 61, 64/5984713001, User=Chiu, Shelly
Not for Resale, 10/14/2019 19:11:42 MDT

G.2.5 Procedure

G.2.5.1 Insert the test sample into the holder. See Figure G.2.

G.2.5.2 Fill the test sample to between 1/3 and 2/3 of the nominal fill volume with the reagent (see G.2.2.1).

G.2.5.3 In case of pressurization, close the holder with the lid and secure the device.

G.2.5.4 Apply a pressure of 110 kPa and hold the pressure for 5 s.

The correlation between the test force and the cross-sectional area of the syringe that is determined by the nominal inner diameter of the syringe can be calculated using Formulae (G.1), (G.2), and (G.3) (see also Table G.1):

from

$$F = p \times A \tag{G.1}$$

and

$$A = \frac{\pi}{4} \times d^2 \tag{G.2}$$

follows

$$F = p \times \frac{\pi}{4} \times d^2 \times 10^{-3} \tag{G.3}$$

where

F is the force in newtons;

p is the target internal pressure (kPa) (i.e. 110 kPa);

A is the cross-sectional area of the syringe barrel (mm^2);

d is the nominal inner diameter of the syringe barrel (mm).

Table G.1 — Correspondence between the inner diameter of the syringe barrel and the test force

Nominal volume of the syringe barrel ml	Nominal inner diameter of the syringe barrel mm	Calculated test force[a] N
0,5	e.g. 4,65	1,87

[a] Calculated for the target internal pressure of 110 kPa.

NOTE Formula (G.3) calculation example: 110 kPa × 3,14/4 × $(4,65\ mm)^2 \times 10^{-3}$ = 1,87 N.

G.2.5.5 Release the pressure.

G.2.5.6 Monitor the test samples for leakage during and after the test.

G.2.6 Expression of results

The test is passed if the tip caps are not falling off and/or if no droplets are visible around the external surfaces of the closure system (wet surface of tip cap or needle shield).

© ISO 2019 – All rights reserved

Copyright International Organization for Standardization
Provided by IHS Markit under license with ANSI
No reproduction or networking permitted without license from IHS
Licensee=Becton Dickinson - Loc 1 - 61, 64/5984713001, User=Chiu, Shelly
Not for Resale, 10/14/2019 19:11:42 MDT

Visually examine if the test samples have passed or failed the test.

G.2.7 Test report

The test report shall include the following:

— applied pressure (kPa) or force (N);

— number of tested samples;

— number of passed/failed samples according to specification;

— any deviations or observations.

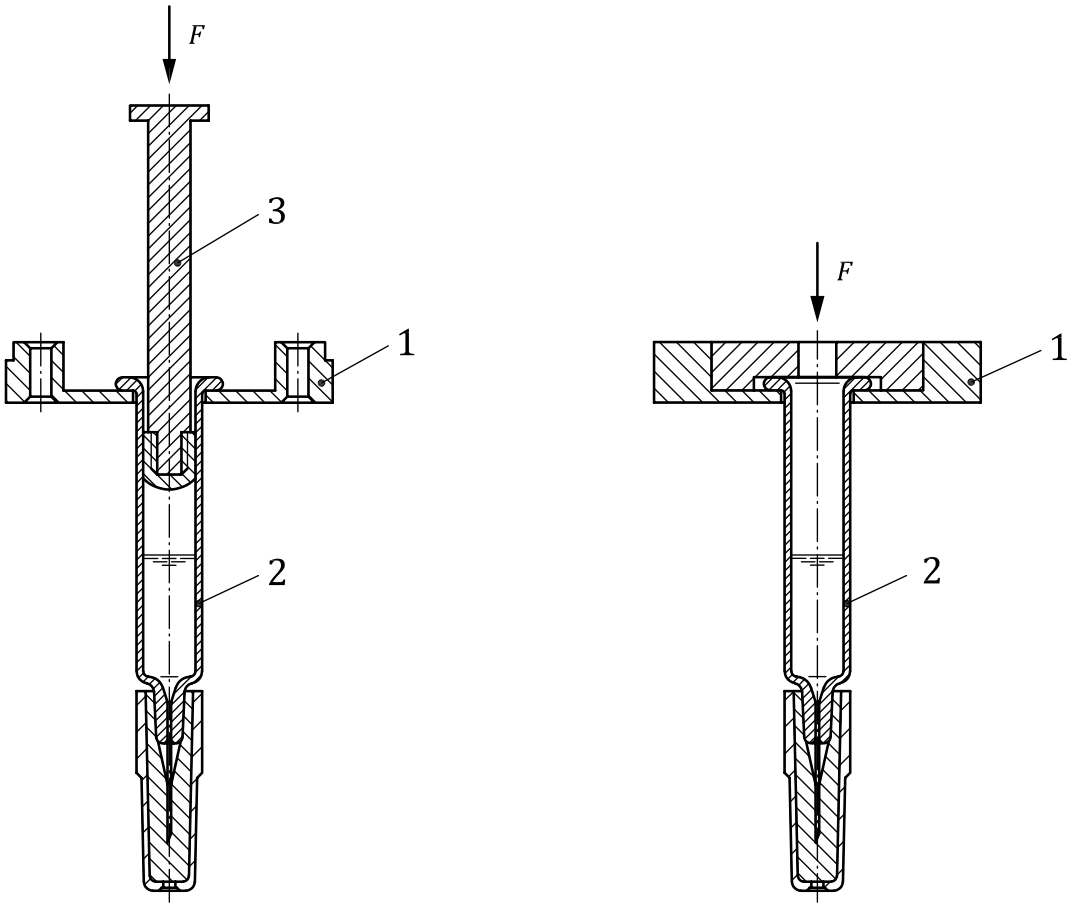

a) Pressure applied via plunger rod and plunger stopper a tensile testing machine

b) Pressure supplied by compressed air directly on filled media

Key

1 syringe holder

2 syringe with closure system

3 plunger rod and plunger stopper

F force in newtons

NOTE This illustration includes a syringe with a needle shield as an example. The testing is equally applicable to syringes with a tip cap.

Figure G.2 — Examples of testing devices for the determination of closure system liquid leakage

© ISO 2019 – All rights reserved
Copyright International Organization for Standardization
Provided by IHS Markit under license with ANSI
No reproduction or networking permitted without license from IHS
Licensee=Becton Dickinson - Loc 1 - 61, 64/5984713001, User=Chiu, Shelly
Not for Resale, 10/14/2019 19:11:42 MDT

G.3 Luer lock adaptor collar pull-off force

G.3.1 Principle

The test is used to assess the pull-off force of a Luer Lock Adaptor (LLA) collar system of sterilized subassembled syringes ready for filling.

It is mainly designed to verify whether the LLA collar system is able to withstand an axial pull-off force in order to avoid detachment of the LLA collar system from the syringe barrel by the insertion of a female 6 % (Luer) conical lock fitting.

G.3.2 Materials

Sterilized subassembled syringes ready for filling with LLA, number as required.

G.3.3 Apparatus

G.3.3.1 Universal tensile and compression testing machine in accordance with the following:

— test speed of 20 mm/min or as appropriate (10 N/s) (see ISO 80369-20);

— load cell appropriate to the force to be measured, typical range of load cell is between 10 N and 100 N;

— sampling rate of at least 65 Hz.

NOTE Definition of load cell, test speed, and sampling rate is subject to agreement between the manufacturer and the customer.

G.3.3.2 Syringe holder (see Figure G.3) and **gripper device**.

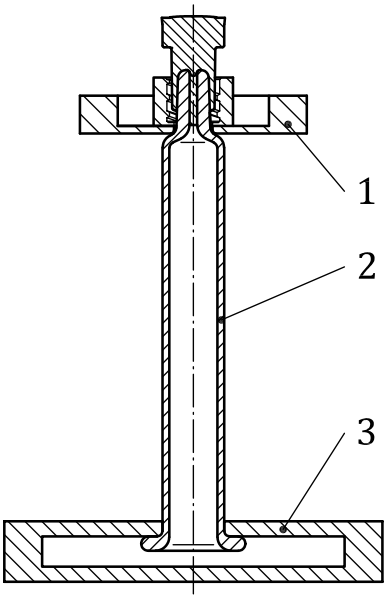

Key

1 LLA gripper plate

2 syringe with LLA/LLA systems

3 syringe holder/base plate

Figure G.3 — Example of a testing device for the determination of the Luer lock adapter collar pull-off force

Copyright International Organization for Standardization
Provided by IHS Markit under license with ANSI
No reproduction or networking permitted without license from IHS
Licensee=Becton Dickinson - Loc 1 - 61, 64/5984713001, User=Chiu, Shelly
Not for Resale, 10/14/2019 19:11:42 MDT

G.3.4 Preparation and preservation of test samples

The test samples shall follow the same process as the product delivered.

G.3.5 Procedure

G.3.5.1 Remove the tip cap.

G.3.5.2 Insert the test sample vertically positioned on the testing machine between the holder (finger flange side) and the gripper (LLA collar side).

G.3.5.3 Make sure that no pressure/movement is applied to the LLA collar system during test assembling.

G.3.5.4 Release the test sample.

G.3.5.5 Set the load cell to “zero”. Attention shall be paid that no significant pre-load is applied when “zero” is set.

G.3.5.6 Apply a test speed of 20 mm/min or as appropriate at an appropriate sampling rate.

G.3.5.7 Record the force versus displacement.

G.3.5.8 Stop the test once the LLA collar system is clearly removed from the syringe tip.

G.3.6 Expression of results

Determine the load peak from the force versus displacement curve. The peak value corresponds to the pull-off force of the LLA collar system of the syringe.

G.3.7 Test report

The test report shall include the following:

— sampling rate (Hz);

— test speed (mm/min);

— peak value (pull-off force) (N);

— number of tested samples;

— number of passed/failed samples according to specification;

— any deviations or observations.

G.4 Luer lock adaptor collar torque resistance

G.4.1 Principle

The test is used to assess the torque resistance of a LLA collar system of a sterilized subassembled syringe ready for filling.

It is mainly designed to verify whether the LLA collar system is able to withstand an applied torque while inserting a female 6 % (Luer) conical lock fitting (i.e. needle hub).

© ISO 2019 – All rights reserved
Copyright International Organization for Standardization
Provided by IHS Markit under license with ANSI
No reproduction or networking permitted without license from IHS
Licensee=Becton Dickinson - Loc 1 - 61, 64/5984713001, User=Chiu, Shelly
Not for Resale, 10/14/2019 19:11:42 MDT

G.4.2 Materials

Sterilized subassembled syringes ready for filling with LLA, number as required.

G.4.3 Apparatus

G.4.3.1 Torque tester combined with a rotation device (see Figure G.4) in accordance with the following:

— torque cell 35 Ncm with 0,05 Ncm resolution or as appropriate to the torque to be measured;

— sampling rate of at least 65 Hz;

— rotation speed of 20 r/min or as appropriate.

NOTE 1 Definition of torque cell, sampling rate, and test speed is subject to agreement between the manufacturer and the customer.

NOTE 2 For this test, either the syringe barrel or the closure can be rotated.

G.4.3.2 Adapter: LLA collar gripper.

G.4.3.3 Syringe holder (rotatable, if this alternative is used).

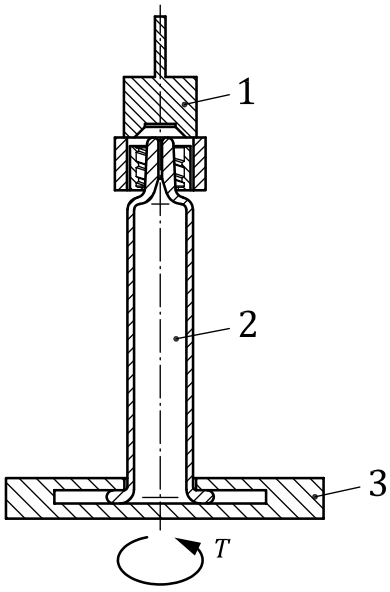

Key

1 LLA gripper inclusive torque sensor

2 syringe with LLA

3 syringe holder/base plate (rotatable)

T rotation

NOTE For this test, either the syringe barrel or the closure can be rotated.

Figure G.4 — Example of testing device for the determination of the Luer lock adapter collar torque resistance, with rotatable syringe holder

G.4.4 Preparation and preservation of test samples and test pieces

The test samples shall follow the same process as the product delivered.

© ISO 2019 – All rights reserved

Copyright International Organization for Standardization
Provided by IHS Markit under license with ANSI
No reproduction or networking permitted without license from IHS
Licensee=Becton Dickinson - Loc 1 - 61, 64/5984713001, User=Chiu, Shelly
Not for Resale, 10/14/2019 19:11:42 MDT

G.4.5 Procedure

G.4.5.1 Insert the test sample vertically positioned into the syringe holder of the testing device. See Figure G.4.

G.4.5.2 Remove the tip cap.

NOTE This can be done manually.

G.4.5.3 Mount the adapter onto the LLA collar.

G.4.5.4 Set the torque cell to “zero”. Attention shall be paid that no significant pre-torque is applied.

G.4.5.5 Set the rotation speed at 20 rotations per minute or as appropriate.

G.4.5.6 Start the test by either rotating the turntable 90° clockwise or counter clockwise, depending on the system. Alternatively, rotate the closure.

G.4.5.7 Record the peak of the applied torque.

G.4.6 Expression of results

Record the maximum torque measured. This corresponds to the torque where the LLA collar starts to rotate on the syringe.

G.4.7 Test report

The test report shall include the following:

— rotation speed (°/s or r/min);

— sampling rate (Hz);

— maximum torque (Ncm);

— number of tested samples;

— number of passed/failed samples according to specification;

— any deviations or observations.

G.5 Luer lock rigid tip cap unscrewing torque

G.5.1 Principle

The test is used to assess the torque of a rigid tip cap of a sterilized subassembled syringe ready for filling.

It is mainly designed to verify whether the rigid tip cap can be removed from the syringe with a reasonable torque.

G.5.2 Materials

Sterilized subassembled syringes ready for filling with a tip cap, numbers as required.

© ISO 2019 – All rights reserved
Copyright International Organization for Standardization
Provided by IHS Markit under license with ANSI
No reproduction or networking permitted without license from IHS
Licensee=Becton Dickinson - Loc 1 - 61, 64/5984713001, User=Chiu, Shelly
Not for Resale, 10/14/2019 19:11:42 MDT

G.5.3 Apparatus

G.5.3.1 Torque tester combined with a rotation device in accordance with the following:

— torque cell 35 Ncm with 0,05 Ncm resolution or as appropriate to the torque to be measured;

— sampling rate of at least 65 Hz;

— rotation speed of 20 r/min or as appropriate.

NOTE 1 Definition of torque cell, sampling rate, and rotation speed is subject to agreement between the manufacturer and the customer.

NOTE 2 For this test, either the syringe barrel or the closure can be rotated.

G.5.3.2 Adapter: tip cap gripper.

G.5.3.3 Syringe holder (rotatable, if this alternative is used).

G.5.4 Preparation and preservation of test samples and test pieces

The test samples shall follow the same process as the product delivered.

G.5.5 Procedure

G.5.5.1 Insert the test sample vertically positioned into the syringe holder of the testing device (see Figure G.5).

G.5.5.2 Mount the adapter onto the tip cap.

G.5.5.3 Set the torque cell to “zero”. Attention shall be paid that no significant pre-torque is applied.

G.5.5.4 Set the rotation speed at 20 r/min or as appropriate.

G.5.5.5 Start the test by either rotating the turntable 90° clockwise or counter clockwise depending on system. Alternatively, rotate the closure.

G.5.5.6 Record the peak load of the applied torque.

G.5.6 Expression of results

Record the maximum torque peak. This corresponds to the torque where the tip cap starts to rotate on the syringe.

G.5.7 Test report

The test report shall include the following:

— rotation speed (°/s or r/min);

— sample rate (Hz);

— maximum torque (Ncm);

— number of tested samples;

— number of passed/failed samples according to specification;

© ISO 2019 – All rights reserved

Copyright International Organization for Standardization
Provided by IHS Markit under license with ANSI
No reproduction or networking permitted without license from IHS
Licensee=Becton Dickinson - Loc 1 - 61, 64/5984713001, User=Chiu, Shelly
Not for Resale, 10/14/2019 19:11:42 MDT

— any deviations or observations.

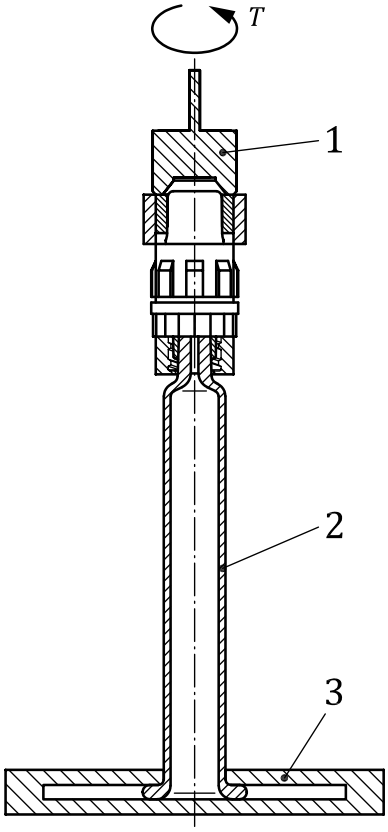

Key

1 gripper inclusive torque sensor

2 syringe with tip cap

3 syringe holder/base plate (rotatable)

T rotation

NOTE For this test, either the syringe or the closure can be rotated.

Figure G.5 — Example of a testing device for the determination of the Luer lock rigid tip cap removal unscrewing torque

G.6 Pull-off force of the tip cap or the needle shield

G.6.1 Method 1

G.6.1.1 Principle

This test is used to assess the removal force of the tip cap or the needle shield of a sterilized subassembled syringe ready for filling.

This method can be customized depending on the intended use of the syringe (e.g. manual use, use in an auto-injector). An alternative procedure is described in G.6.2. Figure G.6 shows examples of testing devices for the determination of the pull-off force of the tip cap or the needle shield.

G.6.1.2 Materials

Sterilized subassembled syringes ready for filling, numbers as required.

© ISO 2019 – All rights reserved
Copyright International Organization for Standardization
Provided by IHS Markit under license with ANSI
No reproduction or networking permitted without license from IHS
Licensee=Becton Dickinson - Loc 1 - 61, 64/5984713001, User=Chiu, Shelly
Not for Resale, 10/14/2019 19:11:42 MDT

G.6.1.3 Apparatus

G.6.1.3.1 Universal tensile and compression testing machine in accordance with the following:

— load cell 50 N to 100 N, appropriate to the force to be measured;

— sampling rate of at least 40 Hz;

— test speed between 100 mm/min and 1 000 mm/min or as appropriate.

NOTE Definition of load cell, sampling rate, and test speed is subject to agreement between the manufacturer and the customer.

G.6.1.3.2 Syringe holder.

G.6.1.3.3 Tip cap/needle shield gripper.

G.6.1.4 Procedure

G.6.1.4.1 Position the test sample vertically with the closure oriented upwards.

G.6.1.4.2 Apply the grip pressure such that the grip does not slide against or distort/deform the closure system.

G.6.1.4.3 With the syringe otherwise unconstrained, set the load cell to “zero”.

G.6.1.4.4 Position the syringe holder such that the syringe will be captured by the holder when an axial tension force is applied.

G.6.1.4.5 Apply a sampling rate of at least 40 Hz.

G.6.1.4.6 Set the bench displacement rate between 100 mm/min and 1 000 mm/min or as appropriate.

G.6.1.4.7 Record the force versus displacement.

G.6.1.4.8 Stop the test once the closure system is completely removed from the syringe tip.

G.6.1.5 Expression of results

The closure system (tip cap /needle shield) pull-out force corresponds to the maximum load recorded in the force versus displacement curve.

G.6.1.6 Test report

The test report shall include the following:

— sampling rate (Hz);

— test speed (mm/min);

— load cell (N);

— maximum load recorded in the force versus displacement curve (N);

— number of tested samples;

— any deviations or observations.

--`,,,,`,,,,,`,`,`,,,,,``,`-`-`,,`,,`,`,,`---

Copyright International Organization for Standardization
Provided by IHS Markit under license with ANSI
No reproduction or networking permitted without license from IHS
Licensee=Becton Dickinson - Loc 1 - 61, 64/5984713001, User=Chiu, Shelly
Not for Resale, 10/14/2019 19:11:42 MDT

Dimensions in millimetres

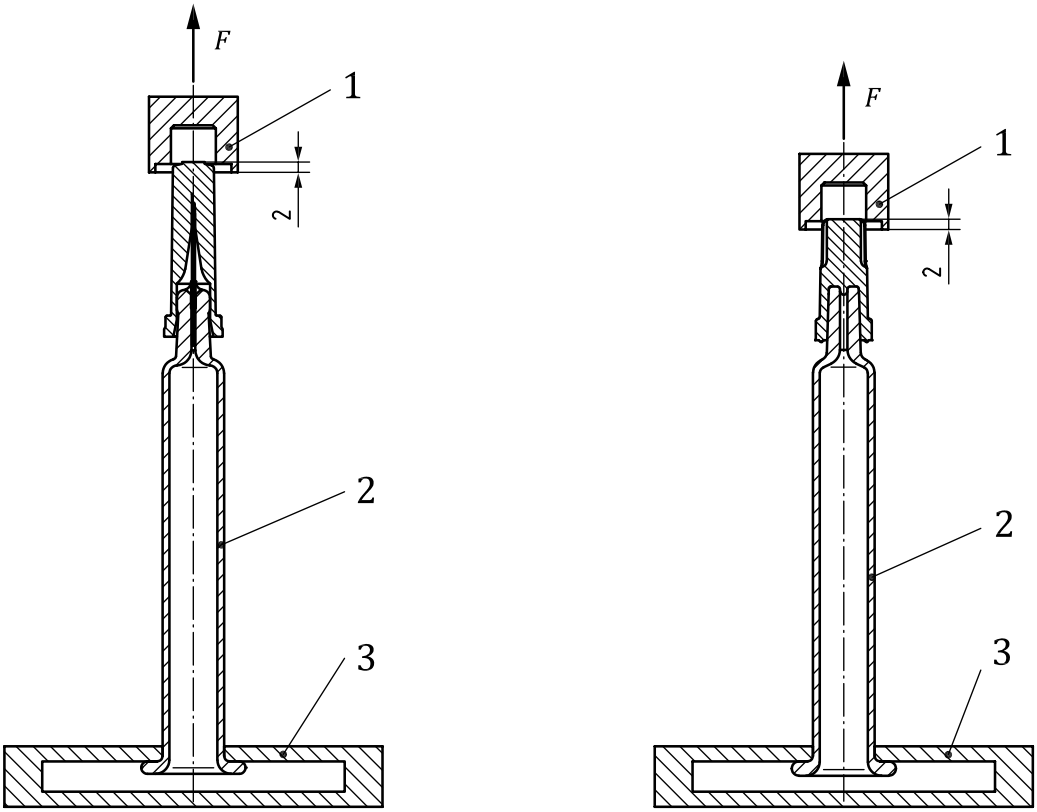

a) Syringe with needle shield **b) Syringe with tip cap**

Key

1 gripper attached to tensile testing machine

2 syringe with needle shield/tip cap

3 syringe holder/base plate

F force in newtons

Figure G.6 — Examples of testing devices for the determination of the pull-off force of the tip cap or the needle shield — Method 1

G.6.2 Method 2

G.6.2.1 Principle

This test is used to assess the removal force of the tip cap or the needle shield of a sterilized subassembled syringe ready for filling.

This test allows the pull-out force to be evaluated without pinching the needle shield and/or the needle. It prevents deformation of the rubber part.

An alternative procedure is described in G.6.1.

G.6.2.2 Materials

Sterilized subassembled syringes ready for filling, numbers as required.

© ISO 2019 – All rights reserved
Copyright International Organization for Standardization
Provided by IHS Markit under license with ANSI
No reproduction or networking permitted without license from IHS
Licensee=Becton Dickinson - Loc 1 - 61, 64/5984713001, User=Chiu, Shelly
Not for Resale, 10/14/2019 19:11:42 MDT

G.6.2.3 Apparatus

G.6.2.3.1 Universal tensile testing and compression machine in accordance with the following:

— load cell up to 500 N;

— sampling rate as appropriate;

— test speed as appropriate.

NOTE Definition of load cell, sampling rate, and test speed is subject to agreement between the manufacturer and the customer.

G.6.2.3.2 Pulling device, see Figure G.7.

G.6.2.4 Procedure

G.6.2.4.1 Position the test sample vertically, syringe flange, and tip cap or needle-shield in their respective holder.

G.6.2.4.2 Release the test sample.

G.6.2.4.3 Set the load cell to “zero”. Attention shall be paid that no significant pre-load is applied when “zero” is set.

G.6.2.4.4 Start the test.

G.6.2.4.5 Record the force versus displacement.

G.6.2.4.6 Stop the test once the closure is removed from the tip of the syringe.

G.6.2.5 Test report

The test report shall include the following:

— load cell (N);

— test speed (mm/min);

— sampling rate (Hz);

— mean, minimum, and maximum value recorded in the force versus displacement curve (N);

— number of tested samples;

— any deviations or observations.

© ISO 2019 – All rights reserved

Copyright International Organization for Standardization
Provided by IHS Markit under license with ANSI
No reproduction or networking permitted without license from IHS
Licensee=Becton Dickinson - Loc 1 - 61, 64/5984713001, User=Chiu, Shelly
Not for Resale, 10/14/2019 19:11:42 MDT

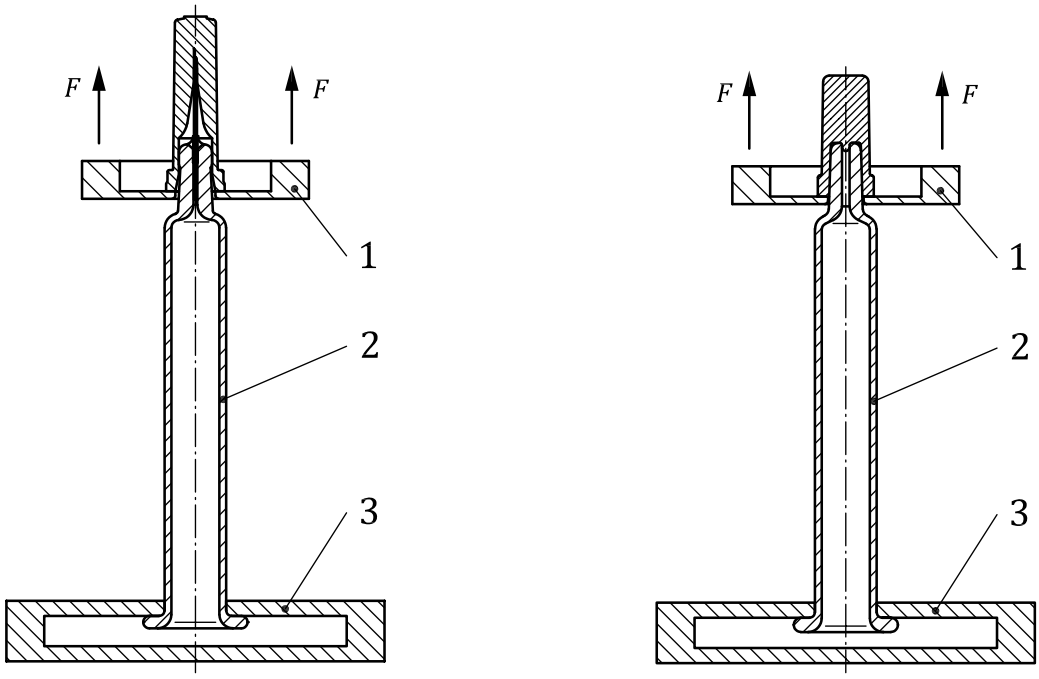

a) Syringe with needle shield **b) Syringe with tip cap**

Key

1 pull-off device attached to tensile testing machine

2 syringe with needle shield/tip cap

3 syringe holder/base plate

F force in newtons

Figure G.7 — Examples of testing devices for the determination of the pull-off force of the tip cap or the needle shield — Method 2

© ISO 2019 – All rights reserved
Copyright International Organization for Standardization
Provided by IHS Markit under license with ANSI
No reproduction or networking permitted without license from IHS
Licensee=Becton Dickinson - Loc 1 - 61, 64/5984713001, User=Chiu, Shelly
Not for Resale, 10/14/2019 19:11:42 MDT

Annex H
(informative)

Dye solution tightness test

H.1 General

Sterilized subassembled syringes ready for filling with the injectable product consist of a syringe barrel with a Luer cone or a staked needle on the side facing the patient (front end) commonly sealed with a tip cap in case of a Luer syringe or a needle shield in case of a syringe with staked needle. The back end is sealed with a plunger stopper that allows the delivery of the drug by pushing the plunger stopper towards the liquid with a plunger rod. The tip cap or needle shield on the one side and the plunger stopper on the other side ensure appropriate sealing of the syringe. The dye solution tightness test is a valuable method to test the tightness of a sterilized subassembled syringe ready for filling in the design development phase.

This test method alone is not sufficient to ensure container closure integrity of the system. The customer should assume responsibility to properly validate a suitable physical, chemical, or microbiological container closure integrity test method to qualify their chosen container closure system (including injectable product).

H.2 Principle

Subassembled syringes that are filled with liquid and stoppered with a plunger stopper are submerged in a dye solution. The subassembled syringes are inspected for leakage by checking the presence or absence of ingress of the dye solution into the syringe after applying a depressurisation/re-pressurization cycle.

H.3 Apparatus, equipment, and reagents

H.3.1 Syringe barrels, according to this document, preferably prepared as being used in regular production.

H.3.2 Tip caps, needle shields, or any other front end closure, to match the front end opening of the syringe, preferably prepared as being used in regular production.

H.3.3 Plunger stoppers, according to ISO 11040-5 to match the inner diameter of the syringe, preferably prepared as being used in regular production.

H.3.4 Particle-free water to fill the syringes.

H.3.5 Appropriate dye solution, including a colorant and possibly a surfactant.

NOTE Suitable dyes are methylene blue, rhodamine B, and fluorescein; possible surfactants is Tween 80[2)].

It is recommended that the dye solution be filtered through a filter (pore size <1 µm) and stored in a clean, particulate-free container until use.

2) Tween 80 is an example of a suitable product available commercially. This information is given for the convenience of users of this document and does not constitute an endorsement by ISO of these products.

© ISO 2019 – All rights reserved

Copyright International Organization for Standardization
Provided by IHS Markit under license with ANSI
No reproduction or networking permitted without license from IHS
Licensee=Becton Dickinson - Loc 1 - 61, 64/5984713001, User=Chiu, Shelly
Not for Resale, 10/14/2019 19:11:42 MDT

H.3.6 Vacuum chamber, capable of maintaining a pressure of min 270 mbar below atmospheric pressure for 30 min.

H.3.7 Hypodermic needle(s), according to ISO 7864 and of size 27 g × 0,5 in.

H.4 Preparation and preservation of test samples and test pieces

H.4.1 Fill the syringes to nominal volume with particle-free water.

H.4.2 Assemble the plunger stopper, leaving an air gap of 2 mm to 5 mm, preferably use the standard placement method intended for the future filling process (vent tube or vacuum placement).

NOTE This method might not work without an air bubble.

H.4.3 Discard any syringes with liquid beyond or between the ribs.

H.4.4 Create one or more positive leak control samples by creating an open fluid path to the syringe content (e.g. by placing a hypodermic needle or similar device between the front end of the syringe and the corresponding closure or in case of needle shields, by removing the needle shield).

H.4.5 Keep one syringe as a reference sample for comparison (not immersed in dye solution).

H.5 Procedure

H.5.1 Fill the vacuum chamber or an appropriate container with dye solution to a level that all syringes can be completely immersed in the solution.

H.5.2 Immerse the syringes in the dye solution. Ensure that the syringes are completely immersed. Reduce the pressure by 270 mbar. Hold the pressure for 30 min then restore to atmospheric pressure. Allow the syringes to remain immersed in the dye solution for an additional 30 min, then remove them carefully from the solution, rinse the syringes with water until all dye solution is completely removed from the outside, and dry the syringes.

H.5.3 Inspect all syringe contents visually for any traces of the dye solution. Compare the syringes to the positive and reference controls. The positive control should show the presence of dye in the syringe contents.

Spectroscopy might also be used to detect dye.

H.6 Test report

The test report should include the following information:

— colour change of the positive leak sample;

— that the reference sample did not show any colour change;

— number of syringes that show a colour change and thus, leaked;

— any deviations or observations.

© ISO 2019 – All rights reserved
Copyright International Organization for Standardization
Provided by IHS Markit under license with ANSI
No reproduction or networking permitted without license from IHS
Licensee=Becton Dickinson - Loc 1 - 61, 64/5984713001, User=Chiu, Shelly
Not for Resale, 10/14/2019 19:11:42 MDT

Annex I
(informative)

Guidance on materials

Materials used in the construction of syringe barrels for use in prefilled syringes should be suitable for the process to be used, the sterilization method to be applied and for the specific requirements as primary packaging for injectable drug products. Materials used in the construction of prefilled syringes should not cause the syringes to be detrimentally affected, physically or chemically, by the normal use of injectable preparations and should be safe for the intended use.

Certain grades of polypropylene (homo-polymer and/or co-polymer polypropylene), cyclo-olefin copolymer and cyclo-olefin polymer have been used for the barrels of prefilled syringes in applications with a variety of injectable products (drugs and biologics).

The organization responsible for the marketing approval of the injectable drug product should demonstrate the appropriateness and compatibility of the selected material and the suitability of the prefillable syringe as a container closure system. This includes, among others, the verification of drug/container interactions (leachable, extractable and sorption assessments) in reference to regulatory guidance (e.g. FDA and EMA), pharmacopoeias and other guidelines (e.g. ICH).

To develop the necessary data as outlined above, a collaborative approach is recommended between the pharmaceutical company that holds the marketing authorization of the injectable product and the supplier of the packaging system, with reference to ISO 15378.

For polymer materials codification, see Table I.1.

Table I.1 — Polymer materials codification

Type of polymer	Codification
Cyclo-olefin copolymer	COC
Cyclo-olefin polymer	COP
Polypropylene	PP
Other polymer	OTH

© ISO 2019 – All rights reserved

Copyright International Organization for Standardization
Provided by IHS Markit under license with ANSI
No reproduction or networking permitted without license from IHS
Licensee=Becton Dickinson - Loc 1 - 61, 64/5984713001, User=Chiu, Shelly
Not for Resale, 10/14/2019 19:11:42 MDT

Bibliography

[1] ISO 2859-1, *Sampling procedures for inspection by attributes -- Part 1: Sampling schemes indexed by acceptance quality limit (AQL) for lot-by-lot inspection*

[2] ISO 3826-1, *Plastics collapsible containers for human blood and blood components — Part 1: Conventional containers*

[3] ISO 3951 (all parts), *Sampling procedures for inspection by variables*

[4] ISO 7619-1,[3)] *Rubber, vulcanized or thermoplastic -- Determination of indentation hardness -- Part 1: Durometer method (Shore hardness)*

[5] ISO 10993-7, *Biological evaluation of medical devices — Part 7: Ethylene oxide sterilization residuals*

[6] ISO 11040-4, *Prefilled syringes — Part 4: Glass barrels for injectables and sterilized subassembled syringes ready for filling*

[7] ISO 11040-5, *Prefilled syringes — Part 5: Plunger stoppers for injectables*

[8] ISO 11040-7, *Prefilled syringes — Part 7: Packaging systems for sterilized subassembled syringes ready for filling*

[9] ISO 11135, *Sterilization of health-care products -- Ethylene oxide -- Requirements for the development, validation and routine control of a sterilization process for medical devices*

[10] ISO 11137 (all parts), *Sterilization of health care products — Radiation*

[11] ISO 13485, *Medical devices — Quality management systems — Requirements for regulatory purposes*

[12] ISO 13926-2, *Pen systems — Part 2: Plunger stoppers for pen-injectors for medical use*

[13] ISO 14644-1, *Cleanrooms and associated controlled environments -- Part 1: Classification of air cleanliness by particle concentration*

[14] ISO 14937, *Sterilization of health care products — General requirements for characterization of a sterilizing agent and the development, validation and routine control of a sterilization process for medical devices*

[15] ISO 15378, *Primary packaging materials for medicinal products — Particular requirements for the application of ISO 9001:2015, with reference to Good Manufacturing Practice (GMP)*

[16] ISO 15747, *Plastics containers for intravenous injections*

[17] ISO 17665-1, *Sterilization of health care products — Moist heat — Part 1: Requirements for the development, validation and routine control of a sterilization process for medical devices*

[18] ISO 80369-20, *Small-bore connectors for liquids and gases in healthcare applications — Part 20: Common test methods*

[19] ISO/IEC Guide 98-3, *Uncertainty of measurement — Part 3: Guide to the expression of uncertainty in measurement (GUM:1995)*

[20] ASTM D7210-06, *Standard Practice for Extraction of Additives in Polyolefin Plastics*

[21] AAMI ST72:2011, *Bacterial endotoxins — Test methods, routine monitoring, and alternatives to batch testing*

3) Withdrawn publication.

© ISO 2019 – All rights reserved

Copyright International Organization for Standardization
Provided by IHS Markit under license with ANSI
No reproduction or networking permitted without license from IHS

Licensee=Becton Dickinson - Loc 1 - 61, 64/5984713001, User=Chiu, Shelly
Not for Resale, 10/14/2019 19:11:42 MDT

[22] European guide for pharmaceutical products, III/2244/87, rev. 3 – January 1989 as amended

[23] GUIDELINE I.C.H. Harmonized Tripartite Guideline, Stability Testing for New Drug Substances and Products, https://www.pmda.go.jp/english/rs-sb-std/standards-development/jp/0019.html

[24] FDA. US Food and Drug Administration, https://www.fda.gov

[25] ICH. International Conference on Harmonisation of Technical Requirements for Registration of Pharmaceuticals for Human Use, http://www.ich.org

[26] UNITED STATES PHARMACOPOEIA. http://www.usp.org

[27] USP <161>, Transfusion and infusion assemblies and similar medical devices

[28] USP <85>, Bacterial endotoxins test

[29] JAPANESE PHARMACOPOEIA. https://www.pmda.go.jp/english/rs-sb-std/standards-development/jp/0019.html

[30] Guideline on Plastic Immediate Packaging Materials, European Medicines Agency, London, http://www.ema.europa.eu/docs/en_GB/document_library/Scientific_guideline/2009/09/WC500003448.pdf

[31] JENKE D. An extractables/leachables strategy facilitated by collaboration between drug product vendors and plastic material/system suppliers, PDA Journal of Pharmaceutical Science and Technology, Vol. **61**. No. 1, January-February 2007

[32] Cantor Verlag. Defect evaluation list for containers made of tubular glass, 4th edition, Vol. 19, Edition 88322 Aulendorf, Germany

© ISO 2019 – All rights reserved

Copyright International Organization for Standardization
Provided by IHS Markit under license with ANSI
No reproduction or networking permitted without license from IHS
Licensee=Becton Dickinson - Loc 1 - 61, 64/5984713001, User=Chiu, Shelly
Not for Resale, 10/14/2019 19:11:42 MDT

ICS 11.040.25

Price based on 53 pages

--`,,,,`,,,,,`,`,`,,,,,```,`-`-`,,`,,`,`,,`---

© ISO 2019 – All rights reserved

Copyright International Organization for Standardization
Provided by IHS Markit under license with ANSI
No reproduction or networking permitted without license from IHS

Licensee=Becton Dickinson - Loc 1 - 61, 64/5984713001, User=Chiu, Shelly
Not for Resale, 10/14/2019 19:11:42 MDT